RADIATION PROTECTION SOLUTIONS

NUCLEAR MEDICINE

Better equipped,
better protection,
for continually
improving safety

Medisystem
LE RADIOPROTECT YOU

DESIGNED AND MADE IN FRANCE

LEMER PAX
PROTECTING LIFE

“Whilst you care for your patients, for 50 years we’ve been taking care of you.”

Every year, thanks to you and your teams, more than 35 million people worldwide are diagnosed or treated with Nuclear Medicine, in more than 100,000 hospitals, centres and clinics around the world*.

At Lemer Pax & Medisystem, we believe that you need to be taken care of too.

With over 90 years of combined experience in radiation protection, working at your side, we know how demanding your work is and our ambition is to be up to this challenge. Our offer and our support are entirely designed to guarantee enhanced safety, ergonomics and efficiency.

So you only have to worry about taking care of others, we’ll make sure that we take care of you.

Pierre-Marie LEMER,
President

Valérie CHEVREUL,
Chief Executive Officer

*Source: SFEN - French Nuclear Energy Society.

WHY CHOOSE LEMER PAX & MEDISYSTEM FOR YOUR RADIATION PROTECTION EQUIPMENT?

A COMPLETE RANGE OF SOLUTIONS DESIGNED FOR YOUR CONDITIONS IN THE FIELD

With respectively 50 years and 40 years of experience in radiation protection, Lemer Pax & Medisystem offer innovative radiation protection equipment to meet all your needs, from the reception of the radiopharmaceutical in your nuclear medicine service to the management of your radioactive waste. These solutions are designed and developed to enable your teams to improve:

SAFETY

In keeping with our "zero defects" commitment for optimal radiation protection, all our equipment is EC marked and ISO 13485 certified by the French National Laboratory of Metrology and Testing for medical devices, ensuring full safety in compliance with regulations, standards and good practice.

COMFORT

All our equipment is adaptable, modular, ergonomic and designed to fit perfectly into your premises and offer your team the best possible working comfort on a daily basis.

EFFECTIVENESS

Our equipment also meets the necessarily high standards of excellence of Nuclear Medicine services and is carefully designed in partnership with the users and our Design Office, guaranteeing your operators robustness, reliability and precision.

WE PROVIDE STATE-OF-THE-ART EQUIPMENT AND EXPERT TEAMS WORKING AT YOUR SIDE

Our team's key priority: provide products and services of excellence allowing you to carry out your work in optimum conditions with full radiation protection. Lemer Pax & Medisystem's expertise combines innovation, technology and ergonomics.

Our teams include Radiation Protection Advisors, Experts in radiation protection calculations, PhDs in materials chemistry, Design Office Engineers, Embedded Software and Automation Engineers, Project Managers, Work Managers, Qualified Technicians, Engineers and PhDs in science, able to respond rapidly to the most complex technical problems.

Contact our customer support department via a direct line and our mobile team will ensure fast on-site service.

MANY NUCLEAR MEDICINE SERVICES IN THE WORLD TRUST US

○ Nuclear medicine and/or radiopharmacy services equipped with Lemer Pax and/or Medisystem products.

HOW CAN WE HELP YOU?

THIS QUESTION DRIVES OUR TEAMS ON A DAILY BASIS TO OFFER YOU TURNKEY SOLUTIONS

DESIGN EQUIPMENT **MOST SUITABLE FOR YOUR NEEDS**

Shielding thickness calculations, radiation protection of your premises, recycling solutions, our offers cover the complete spectrum of radiation protection, from standard to specific. Our teams have extensive knowledge of the constraints of a Nuclear Medicine service and validate the radiation protection solutions adapted to your specific requirements.

INSTALLING THE EQUIPMENT AND **TRAINING YOUR STAFF**

After delivering the product, our teams work with you for hands-on training and configuration in your service. We install the equipment and spend the training time necessary with your collaborators to provide support in the development of your practices.

UPGRADE YOUR EQUIPMENT

To guarantee the performance of your equipment over time, upgrades of the embedded software are installed on the connected products, keeping our products in perfect operating condition at all times.

OFFERING YOU **PREVENTIVE MAINTENANCE SERVICES**

In order to regularly check the reliability of your equipment, we offer customised maintenance contracts, allowing our technicians to carry out inspection and replacement operations if necessary. A preventive and curative maintenance service allowing to guarantee the reliability of your equipment.

ENSURING RECYCLING OR REMOVAL OF YOUR EQUIPMENT

In order to achieve sustainable development and to contribute to the energy transition, we are partners with Récylum, an approved channel for the recycling of end of life products. During service redevelopment and reorganisation work or when completely relocating the laboratory, we will deinstall, move and reinstall your hot cells, hoods, glove boxes and decay tanks. We also take care of removing and recycling obsolete equipment.

CONTENTS

We deliver specific solutions for your most complex requirements.

Initially, a designer and manufacturer, we have now become a supplier of global solutions combining all the skills required along the entire value chain of a Nuclear Medicine service when it comes to radiation protection.

From the arrival of the radionuclide in your premises to the management of your radioactive waste and contamination, Lemer Pax and Medisystem provide their expertise throughout the entire life cycle of a Nuclear Medicine service to protect what is most important: life!

PREPARATION

Preparation and fractionating hot cells ^{99m}Tc

EASYPHARMA COMPACT® 12
EASYPHARMA 4R 16
MEDI 9000 2R LME 20
MEDI 9000 4R LME 24
MEDI 2000 4R LME 28
PSMEB 32

Preparation and fractionating hot cells ^{18}F

EASYPHARMA HE 36
MEDI 9000 PET 40
EASYPET 44
MEDI 2000 PET C 48

Preparation and fractionating hot cells ^{68}Ga

EASYPHARMA Ga/Ge 52
MEDI 9000 RESEARCH 2R 56
MEDI 9000 RESEARCH 4R 60
MEDIFLASH AIRLOCK CHAMBER 64
GALLIUM 2R HOT CELL 66

Preparation and fractionating screens

HBI 70
MOBILE SHIELD 71
LEAD BRICKS & PLASTIC SHELLS 72
L-BLOCK 74

Overpressure preparation hood

L-BLOCK AIR 80

Preparation accessories

PDA SUPPORT 81
SHIELDED DRY BATH 82
SHIELDED STIRRER 83
POSITONG TONGS 84
MEDI HANDLING TONGS 85
CONT'ELU ELUTION POTS 86
PFE/PME/PHE VIAL SHIELDS 88
MEDI 24 VIAL SHIELD 90
EXPOSURE REDUCING COVER 91

Measuring devices

SCINTIDOSE DOSE CALIBRATOR 92
MEDI 405 DOSE CALIBRATOR 96

Transport equipment

POSISAFE® 98

Layout of the premises

BENCHTOP 100
WALL PASS-THROUGH 101
VIEWING WINDOWS 102
SAFEVIEW® 103

INJECTION

Syringe shield

MEDICLIC 108
EASYVIEW 110
EASYSQUEEZE 112
DRYING RACK FOR SYRINGE SHIELDS 113

Carrier cases

MEDI CARRIER 114
EASYBOX CARRIER 115
CROCOBOX CARRIER 116

Transport trolleys

MANUBOX 117
COMBINED TRANSPORT TROLLEY FOR MANUAL INJECTION 118
CHT 119

Protection shields

ALARA INJECTION SHIELD 120
BPP30 HV SHIELD 122

Injection units

MANUJET 124
MANUJET SHIELD 126
JETTI® 128
POSIJET® 132
EPIJET® 140

Layout of the premises

EXTRACTION SYSTEM 142
PMIP 143

STORAGE

Needle bins

MEDISHARP 148
PRA3 & PRA10 149

Waste bins

EASYDROP 150
MEDI 64 & MEDI 64 PET 152
EASYDROP + ... 154
EASYMOVE 500 TROLLEY 156

Source storage cabinets

STORAGE DRUM 158
MOBILE SHIELDED CHAMBER 159
SHIELDED STORAGE CABINET 160
SAFETY STORAGE 162

RADIOACTIVE WASTE MANAGEMENT

WALL-HUNG SEPARATION TOILET 172
DECAY TANKS 173
EASYRADWATER 174
NOVABAND® & NOVATUBE® 176

CONTAMINATION MANAGEMENT

NOVASHIELD® SHEETS 180
DISINFECTANTS & DECONTAMINANTS 181

PRE PARA TION

Preparation and fractionating hot cells ^{99m}Tc

EASYPHARMA COMPACT® 12
EASYPHARMA 4R 16
MEDI 9000 2R LME 20
MEDI 9000 4R LME 24
MEDI 2000 4R LME 28
PSMEB 32

Preparation and fractionating hot cells ^{18}F

EASYPHARMA HE 36
MEDI 9000 PET 40
EASYPET 44
MEDI 2000 PET C 48

Preparation and fractionating hot cells ^{68}Ga

EASYPHARMA Ga/Ge 52
MEDI 9000 RESEARCH 2R 56
MEDI 9000 RESEARCH 4R 60
MEDIFLASH AIRLOCK CHAMBER 64
GALLIUM 2R HOT CELL 66

Preparation and fractionating screens

HBI 70
MOBILE SHIELD 71
LEAD BRICKS & PLASTIC SHELLS 72
L-BLOCK 74

Overpressure preparation hood

L-BLOCK AIR 80

Preparation accessories

PDA SUPPORT 81
SHIELDED DRY BATH 82
SHIELDED STIRRER 83
POSITONG TONGS 84
MEDI HANDLING TONGS 85
CONT'ELU ELUTION POTS 86
PFE/PME/PHE VIAL SHIELDS 88
MEDI 24 VIAL SHIELD 90
EXPOSURE REDUCING COVER 91

Measuring devices

SCINTIDOSE DOSE CALIBRATOR 92
MEDI 405 DOSE CALIBRATOR 96

Transport equipment

POSISAFE® 98

Layout of the premises

BENCHTOP 100
WALL PASS-THROUGH 101
VIEWING WINDOWS 102
SAFEVIEW® 103

OUR VISION FOR DESIGN

The Easypharma Compact® shielded hot cell has been designed to provide an **ergonomic workspace** for operators. They can choose their **working position** (standing or sitting) and the "Vision +" option provides a **complete overview** of the work surface (total surface of the front door in laminated lead glass). This unprecedented comfort is complemented by **optimised radiation protection** allowing operators to work without the need for a lead apron, further improving the quality and comfort at work.

EASY**PHARMA COMPACT®** CLASS **A**

ULTRA-COMPACT UNIT FOR THE PREPARATION OF RADIOPHARMACEUTICALS

LOW & MEDIUM **ENERGY**

SPECT

ASSOCIATED PRODUCTS

- Scintidose dose calibrator
- Medi 405 dose calibrator
- Cont'Elu elution pots
- PFE/PME vial shields
- PDA support
- Positong handling tongs
- Easyview syringe shields

The Lemer Pax Easypharma Compact® shielded hot cell with 2 glove ports is a manual preparation hotcell for low and medium energy radioisotopes. It has been designed to assure the safety of the radioisotopes during the various operations: elution, fractionating, radiolabelling, reconstitution of radiopharmaceuticals and measurement kits, while protecting the operator from contamination and exposure (full-body) to ionising radiation from the radioactive element handled. With the Class A laminar flow (ISO 5), the integrity of the preparations and medication is ensured during each operation.

Radiobiological protection is provided by lead screens (15 mm) and lead panels (58 mm) to achieve a very low uniform dose equivalent rate outside the hot cell during all the handling phases.

The hot cell shielding allows the handling of radioisotopes common to all scintigraphic examinations in nuclear medicine (^{99m}Tc, ^{201}Tl, ^{111}In, ^{123}I, etc.).

FOCUS

The lockable generator compartment, for improved security, is equipped with two independent lifts compatible with all ^{99}Mo/^{99m}Tc generators and allows for the simultaneous use of two generators for daily elutions.

The 20 mm lead shielded lateral air-locks chambers are each fitted with robust stainless steel sliding trays allowing for the entrance and removal of equipment and disposable accessories used every day for work in a confined shielded area.

Opening and closing of the air-lock chambers are facilitated by a **foot pedal opening system** (to avoid unnecessary movement of the operator in the work space).

A dose calibrator compartment allows the installation of the measuring device as required, for improved versatility. Radiation to the user's hands and fingers is considerably reduced with the **"Posilift"** automatic dose calibrator dipper raising system available with the Lemer Pax & Medisystem group dose calibrator references.

Two accesses are available for the two waste compartments, each with full access opening and partial magnetic opening to reduce the radiation cone. The bins are removed from inside the enclosure to secure the users and offer optimum full-body radiation protection (front removal available as an option).

Numerous sockets (electrical, USB, RJ45) are also available to the operator (4 strips) to facilitate the installation and programming of the accessories required for the various radiolabelling operations: stirrer, water bath, etc.

To guarantee effective disinfection, the shielded cell is equipped with **germicidal UV tubes with adjustable timer**.

REGULATORY FRAMEWORK

The Easypharma Compact® shielded hot cell meets the requirements of the **European machinery 2006/42/EC** and electromagnetic compatibility **2004/108/EC** directives. It fulfils the requirements of the **good preparation practices** (GPP & GMP) for radiopharmaceutical drugs, provided that the customer also implements suitable procedures.

In terms of radiation protection, the Easypharma Compact® meets the requirements of the **European Directive 96/29 EURATOM of 29 June 1996**. It guarantees a **dose rate at 5 cm from the walls of less than 25 µSv/h** for the operator. Also meet the requirements of **the order of 16 January 2015 approving Decision No. 2014-DC-0463 of the French Nuclear Safety Authority (ASN)** mainly concerning the ventilation and negative pressure of the shielded hot cell, the Easypharma Compact® can be immediately connected to the ventilation network, independently of the rest of the building, with a 100 mm diameter suction outlet located on the ceiling of the room. It is fitted with an exhaust fan (measurement at the cell outlet 120 m^3/h, 1.7 m/s) located after the filtration system and allows to obtain a 250 Pa negative pressure inside the cell.

The different air classes in the cell are measured per standard ISO 14644. The hot cell is fitted with a self-contained ventilation and filtration system composed of a HEPA inlet filtration and aerosol and active carbon outlet filters. An ISO 5 **Class A** controlled atmosphere zone (GMP criteria) under laminar flow is provided along the entire length of the work surface by 2 fans. The generator compartment and the airlock chambers have independent air ventilation/filtration systems that ensure an ISO 7 air quality in class C (GMP criteria).

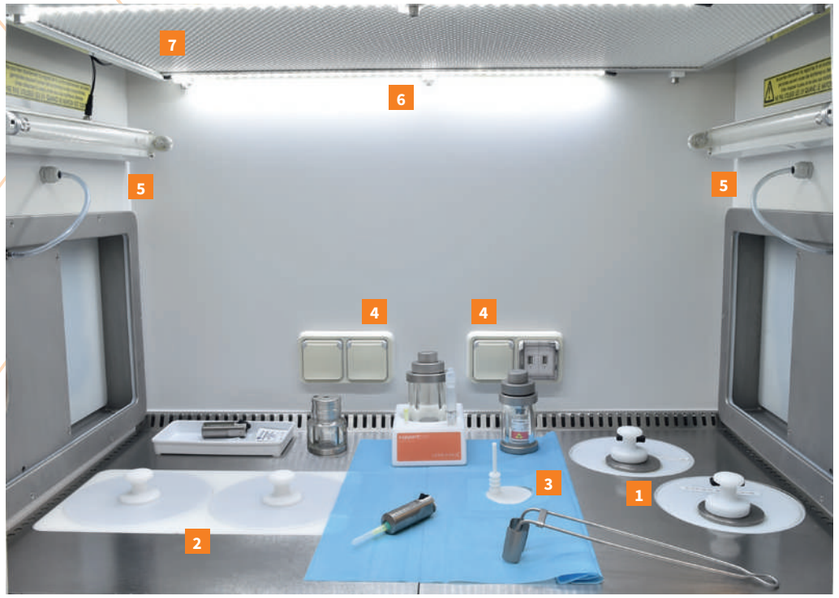

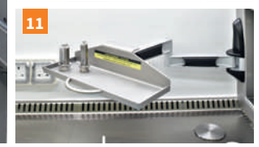

1 | 2 waste bins **2** | 2 independent accesses for each generator **3** | 1 access for the dose calibrator **4** | 2 socket emplacements (electrical, USB, RJ45) **5** | Germicidal UV tubes **6** | LED lighting **7** | Extra-large HEPA filter covering the entire work surface **8** | 1 shielded and lockable compartment for 2 generators, equipped with 2 loading shelves and 2 independent lifts **9** | Partial magnetic access **10** | Airlock chamber sliding tray for transfer of accessories and consumables **11** | Optional hinged shelf **12** | Posilift system (raising and lowering of the dose calibrator dipper by foot control) **13** | Waste bin compartment with frontal opening as an option

OPTIONS

VISION +	radiation protected front door made entirely of laminated lead glass for full visibility of the work surface.
SCREEN DISPLAYING DOSE CALIBRATOR MEASUREMENT	within the hot cell, allows for unprecedented working ergonomics for the operator.
VOCAL CONTROLS	for voice-activated use of the dose calibrator.
TWO-WAY INTERLOCKING AIRLOCK CHAMBER	allows for perfectly safe working conditions in terms of hygiene, air flow and allows to insert and remove the equipment within the work surface.
20 MM LEAD SHIELDED LARGE LATERAL AIRLOCK CHAMBER	to accommodate the dose carrier cases.
LIFT	allows the height of the hot cell to be adjusted for greater working comfort regardless of the operator's height.
RADIOACTIVITY MONITORING	informs users of the types of radiation and dose rates measured in the hot cell. Possibility of setting alert thresholds.
AIR QUALITY MONITORING (CLASS A)	allows particle counting on the work surface in real time.
30 MM ADDITIONAL LEAD SHIELDING	allows the handling of high-energy radiopharmaceuticals (^{18}F, ^{68}Ga, ^{131}I) for certain activities. A perfect backup solution for the PET preparations in case of the unavailability of the routine automatic service system.
ELECTRICAL CONTROL OF INTERIOR POWER SOCKETS	allows the use of the sockets to be managed from the external control panel, thus facilitating the programming of the use of electrical accessories present on the work surface (water bath, heating unit, etc.).
ARTICULATED SHELF	allows the placement of accessories and consumables without obstructing the work surface.
EXTERNAL ERGOTRON ARM	allows the installation of a screen and a keyboard to control the dose calibrator.
FRONT WASTE REMOVAL	to limit contamination of the work area by waste.
LOAD-DISTRIBUTION PLATES	recommended for load distribution in facilities where the permitted floor load does not correspond to the weight of the hot cell.

CHARACTERISTICS

General

External dimensions* (1/2 airlock chamber): L 1,553/1,894 x D 959 x H 2,165 mm

Hot cell tare weight (1/2 airlock chamber): 2 500/2 600 kg

Exterior finish: ABS white grain

Interior finish: White anti-UV PVC

Standard equipment:
- 1 airlock chamber
- 1 shielded compartment - 2 generators
- 1 shielded compartment - dose calibrator
- 2 shielded housings (1 bin each)

Type of lighting: LED

Brightness: > 1 000 Lux

Germicidal UV: 2 x 8W UVC tubes with timer

Noise level: < 63 dB(A)

Shielding thickness: 15 mm of lead

Radiation protection:

Maximum radioactivity that can be handled to obtain a dose rate less than 25 µSv/h at 5 cm from the walls**

Radionuclides	Maximum radioactivity that can be handled
^{99m}Tc	7,07.10^{9} TBq
^{111}In	0,129 TBq
^{201}Tl	1,04.10^{9} TBq
^{177}Lu	0,185 TBq
^{123}I	307 MBq

Calculation conditions: exposed sources in contact with the inner wall of the hot cell

Work surface

Dim. : L 954 x D 585 x H 565 mm

Effective dimensions: L 954 x D 520 x H 565 mm

Work surface height: 995 mm

Work surface finish: 316L stainless steel

Shielding thickness: 15 mm of lead

Number of glove ports: 2

Diameter of the glove ports: 156 mm

Glove port axis height: 1 080 mm

Effective dimensions of the standard lead glass viewing window: L 535 x H 368 x Th. 58 mm

Generator compartment:

Internal dimensions of the generator compartment: L 369 x D 390 x H 410 mm

Effective dimensions for each generator: L 180 x D 350 x H 364 mm

Security and closing of the compartment: lockable door

Shielding thickness: 50 mm of lead

Number of generators: 2

Generator models: Tekcis®, Ultra Technekow™ (other upon request)

Dose calibrator compartment

Effective dimensions of the dose calibrator compartment: Ø 220 x H 510 mm

Shielding thickness: 15 mm of lead

Dose calibrator brand: Lemer Pax, Medisystem, Capintec, Veenstra

Bin housings

Number of housings: Ø 145 x H 210 mm

Effective dimensions of a 1-bin housing: 2

Compatible waste container models: Dispo 2L - Septoeco PBS New 2L (AP Medical)

2 opening systems available: full manual, partial magnetic

Shielding thickness: 15 mm of lead

Removal of the waste bins: from inside the hot cell as standard

Airlock chamber

Inner dimensions: L 319 x D 182 x H 232 mm

Dim. Effective dimensions: L 246 x D 150 x H 211 mm

Sliding tray: on slide rail - max. load 10 kg

Effective dimensions of the sliding tray: L 246 x D 150 x H 211 mm

Shielding thickness: 20 mm of lead

Effective dimensions of airlock chamber door shielded window: L 155 x H 195 x Th. 24 mm

Options

Vision+
Effective dimensions of the window: L 765 x H 613 x Th. 58 mm

Articulated shelf
Effective dimensions: L 300 x D 100 mm
Maximum load: 10 kg

Measurement display screen (inside the hot cell): 15 inches

Large airlock chamber
Inner dimensions: L 419 x D 182 x H 232 mm
Effective dimensions: L 346 x D 150 x H 211 mm
Effective dimensions of airlock chamber door shielded window: L 255 x H 195 x Th. 33 mm
Shielding thickness: 20 mm of lead

Removal of the waste bins from the front
Effective dimensions of the bin compartment: L 166 x D 390 x H 270 mm
Number of bins: 2
Shielding thickness: 15 mm of lead

Programmer: controls 1 socket

Adapter kit for sterile gloves

Dry contact: information on the machines status

Download the product data sheet at lemerpax.com

Aeraulic

Exhaust air flow rate: 120 m³/h

Extraction filtration: HEPA filter and active carbon filter

Work surface air quality: Class A

Laminar flow filtration: HEPA filter

Negative pressure inside the hot cell: -180 Pa (+/- 20 %)

Airlock chamber and generator air quality: Class C

Controls: extraction shutdown

Electrical

Electrical: 230 V

Maximum absorbed current / Electrical data / Current consumption: 16 A / 2 Poles+G 50 Hz / 3 A

Interior power sockets: 4 sockets (electrical, RJ45 or USB as required)

Installation requirements

Floor load: 2 900 kg/m²

Door passage width: ≥ 90 cm

Diameter required for air extraction from the hot cell: Ø100 mm

Compressed air (service or compressor): 6 bar, 20 L/min.

Package

Package dimensions: L 2 200 x D 1 500 x H 2 500 mm

Package weight (product without options): 3 000 kg

Ref.: 00017860

EFFECTIVE DIMENSIONS (mm)

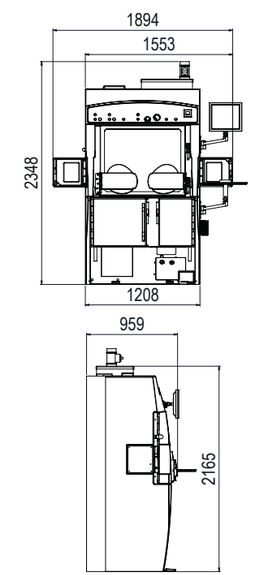

* The dimensions must be confirmed by a layout drawing
**Regulations in ASN Guide No.32 "In vivo nuclear medicine facilities: minimum technical rules for design, operation and maintenance"

OUR VISION FOR DESIGN

The Easypharma 4R shielded hot cell was designed to provide an **ergonomic workstation** for operators, mainly providing the possibility of: choosing their **working position** (standing or sitting), **full visibility** of the work surface with the Vision+ option (radiation protected front door made entirely of laminated lead glass – exclusive to Lemer Pax), and a **spacious work area** offering two preparation stations for one or two users. This unprecedented comfort is complemented by **optimised radiation protection** allowing operators to work without wearing lead aprons for improved comfort.

EASY**PHARMA 4R**

CLASS **A**

PREPARATION CABINET OF RADIOPHARMACEUTICALS

LOW & MEDIUM **ENERGY**

SPECT

ASSOCIATED PRODUCTS

- Scintidose dose calibrator
- Medi 405 dose calibrator
- Cont'Elu elution pots
- PFE/PME vial shields
- PDA support
- Positong handling tongs
- Easyview syringe shields

The **Easypharma shielded hot cell with 4 glove ports** is for **manual preparation** of **low and medium energy** radiopharmaceuticals, used for SPECT scintigraphic examinations with common isotopes such as: ^{99m}Tc, ^{201}Tl, ^{111}In, ^{123}I, etc. This **extra-large** hot cell model offers **two ergonomic workstations** for one or two users. Biological protection is provided by lead (15 mm) and lead glass (58 mm) shields, which allow a very low uniform equivalent dose rate to be obtained outside the enclosure during all preparation phases: elution, radiolabelling, fractionating and measurement, right up to the packaging of the radiopharmaceutical patient dose.

The shielding of the hot cell protects the operator from contamination and exposure (full body) to ionising radiation from the radioisotope being handled while ensuring a **Class A** (ISO 5) air laminar flow throughout the workspace.

REGULATORY FRAMEWORK

The Easypharma 4R hot cell meets the **requirements of the European machinery 2006/42/EC** and electromagnetic compatibility **2004/108/EC** directives.
It also meets the requirements of good preparation practices (GPP & GMP) for radiopharmaceutical drugs, subject to the implementation of suitable procedures, jointly with the customer.

In terms of radiation protection, the Easypharma 4R meets the requirements of the **European Directive 96/29 EURATOM of 29 June 1996**. It guarantees a **dose rate at 5 cm from the walls of less than 25 µSv/h** for the operator.
To meet the requirements of **the order of 16 January 2015 approving Decision No. 2014-DC-0463 of the French Nuclear Safety Authority (ASN)** mainly concerning the ventilation and negative pressure of the shielded hot cell, the Easypharma 4R can be immediately connected to the ventilation network, independently of the rest of the building, with a 100 mm diameter suction outlet located on the ceiling of the room. It is fitted with an exhaust fan (measurement at the cell outlet 120 m^3/h, 1.7 m/s) located after the filtration system and allows to obtain a 250 Pa negative pressure inside the cell.
The hot cell is fitted with a self-contained ventilation and filtration system composed of a HEPA inlet filtration and aerosol and active carbon outlet filters.

The different air classes in the enclosure are measured in accordance per the ISO 14644 standard. An ISO 5 **Class A** controlled atmosphere zone (GMP criteria) under laminar flow is provided along the entire surface of the work surface by two fans. The generator compartment and the airlock chambers have an independent air ventilation/filtration system that ensures an ISO 7 air quality in class C (GMP criteria).

FOCUS

The generator compartment, with a lockable door for improved security, is equipped with two independent lifts compatible with all ^{99}Mo/^{99m}Tc generators and allows for the simultaneous use of two generators for the preparation of daily elutions.

The 20 mm lead shielded lateral airlock chambers are each fitted with a robust stainless steel sliding tray allowing to insert and remove equipment and disposable accessories, used every day for work in a confined shielded area.
The opening and closing of the airlock chamber inner doors is operated by a foot-operated compressed air supply via a dedicated foot pedal.

The dose calibrator compartment allows the installation of the measuring device as required for improved versatility. Exposure Radiation to the user's hands and fingers is considerably reduced with the "Posilift" automatic dose calibrator dipper raising system available with the Lemer Pax & Medisystem group dose calibrator references.

Waste separation is made easy with **three separate bins**. Three accesses are available on the work surface with full and partial magnetic openings, to reduce the radiation cone. Waste bins are removed from the inside of the hot cell for improved safety and optimised full-body radiation protection for users. Front removal is available as an option.

Several sockets (electrical, USB, RJ45) are also available to the operator (4 emplacements) to facilitate the installation and programming of the accessories required for the various radiolabelling operations: stirrer, water bath, etc. To guarantee effective disinfection, the shielded cell is equipped with **germicidal UV two tubes with an adjustable timer**.

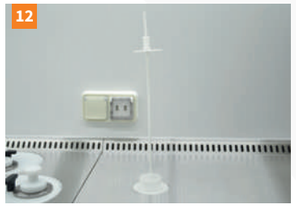

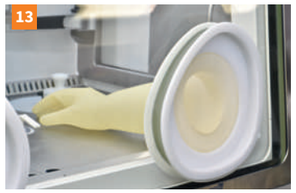

1 | 2 waste bins **2** | 2 independent accesses for 2 generators **3** | 1 access for the dose calibrator **4** | 2 socket emplacements (electrical, USB, RJ45) **5** | Germicidal UV tubes **6** | LED lighting **7** | Extra-large HEPA filter **8** | 1 shielded and lockable compartment for 2 generators, equipped with 2 loading trays and 2 independent lifts **9** | Magnetic partial opening **10**| Airlock chamber sliding tray for transfer of accessories and consumables **11** | Optional large shielded lateral airlock chamber **12** | Posilift system (raising and lowering of the dose calibrator dipper by foot control) **13** | Adapter kit for sterile gloves

OPTIONS

SCREEN DISPLAYING DOSE CALIBRATOR MEASUREMENT	placed in the bottom of the hot cell, allows for unprecedented working ergonomics for the operator.
VOCAL CONTROLS	for voice-activated use of dose calibrator.
TWO-WAY INTERLOCKING AIRLOCK CHAMBER	allows for perfectly safe working conditions in terms of hygiene, airflow and allows to maintain continuous Class A flow.
SECOND 20 MM LEAD SHIELDED LATERAL AIRLOCK CHAMBER	allows the insertion and removal of equipment to the work surface.
20 MM LEAD SHIELDED LARGE LATERAL AIRLOCK CHAMBER	to accommodate the dose carrier cases.
LIFT	allows the height of the hot cell to be adjusted for greater working comfort regardless of the operator's height.
RADIOACTIVITY MONITORING	informs users of the types of radiation and dose rates measured in the hot cell. Possibility of setting alert thresholds.
AIR QUALITY MONITORING (CLASS A)	allows particle counting on the work surface in real-time.
30 MM ADDITIONAL LEAD SHIELDING	allows the handling of high-energy radiopharmaceuticals (^{18}F, ^{68}Ga, ^{131}I) for certain activities. A perfect backup solution for the PET preparations in case of the unavailability of the routine automatic service system.
ELECTRICAL CONTROL OF INTERIOR POWER SOCKETS	allows the use of the sockets to be managed from the external control panel, thus facilitating the programming of the use of electrical accessories present on the work surface.
ARTICULATED SHELF	allows the placement of accessories and consumables without obstructing the work surface.
EXTERNAL ERGOTRON ARM	allows the installation of a screen and a keyboard to control the dose calibrator.
FRONT WASTE REMOVAL	to limit contamination of the work area by waste.
LOAD-DISTRIBUTION PLATES	recommended for load distribution in facilities where the permitted floor load does not correspond to the weight of the hot cell.

CHARACTERISTICS

General

External dimensions* (1/2 airlock chamber): L 2 293/2 634 x D 954 x H 2 143 mm

Hot cell tare weight (1/2 airlock chamber): 3 250/3 350 kg

Exterior finish: ABS white grain

Interior finish: White anti-UV PVC

Standard equipment:
- 1 airlock chamber
- 1 shielded compartment - 2 generators
- 1 shielded compartment - dose calibrator
- 3 shielded housings (1 bin each)
- 4 sockets (electrical or USB or RJ45)

Type of lighting: LED

Brightness: > 1 000 Lux

Germicidal UV: 2 x 8W UVC tubes with timer

Noise level: < 63 dB(A)

Shielding thickness: 15 mm of lead

Radiation protection:

Maximum radioactivity that can be handled to obtain a dose rate less than 25 µSv/h at 5 cm from the walls**

Radionuclides	Maximum radioactivity that can be handled
^{99m}Tc	7,07.10^{9} TBq
^{111}In	0,129 TBq
^{201}Tl	1,04,10^{9} TBq
^{177}Lu	0,185 TBq
^{123}I	307 MBq

Calculation conditions: exposed sources in contact with the inner wall of the hot cell

Work surface

Dim. : L 1 694 x D 590 x H 575 mm

Effective dimensions: L 1 694 x D 480 x H 575 mm

Work surface height: 980 mm

Work surface finish: 316L stainless steel

Shielding thickness: 15 mm of lead

Number of glove ports: 4

Diameter of the glove ports: 156 mm

Glove port axis height: 1 080 mm

2 front doors with 2 viewing windows

Effective dimensions of the standard lead glass viewing window: L 535 x H 368 x Th. 58 mm

Generator compartment:

Internal dimensions of the generator compartment: L 369 x D 390 x H 410 mm

Effective dimensions for each generator: L 180 x D 350 x H 364 mm

Security and closing of the compartment: door with key lock

Shielding thickness: 50 mm of lead

Number of generators: 2 (3rd optional)

Generator models: Tekcis®, Ultra TechneKow™ (other upon request)

Dose calibrator compartment

Effective dimensions of the dose calibrator compartment: Ø 220 x H 495 mm

Shielding thickness: 15 mm of lead

Dose calibrator brand: Lemer Pax, Medisystem, Capintec, Veenstra

Waste bin compartment

Effective dimensions of a 1-bin housing: Ø 145 x H 210 mm

Number of housings: 3

Shielding thickness: 15 mm of lead

2 opening systems available: full manual, partial magnetic

Removal of the waste bins: from inside the hot cell as standard

Airlock chamber

Inner dimensions: L 319 x D 182 x H 232 mm

Effective dimensions: L 246 x D 150 x H 211 mm

Effective dimensions of airlock chamber door shielded window: L 155 x H 195 x Th. 24 mm

Shielding thickness: 20 mm of lead

Options

Vision+ for each door:
Effective dimensions of the window:
L 765 x H 613 x Th. 58 mm

Articulated shelf:
Effective dimensions: L 300 x D 100 mm

Maximum load: 10 kg

Dose calibrator measurement display screen (inside hot cell): 15 inches

Large airlock chamber:
Inner dimensions: L 419 x D 182 x H 232 mm
Effective dimensions: L 346 x D 150 x H 211 mm
Effective dimensions of airlock chamber door shielded window: L 255 x H 195 x Th. 33 mm
Shielding thickness: 20 mm of lead

Waste compartment with removal from the front:
General dimensions of the compartment:
L 332 x H 270 x Th. 390 mm
Effective dimensions of the compartment:
L 332 x H 227 x Th. 351 mm
Number of bins: 3
Shielding thickness: 15 mm of lead

Built-in C-Class source storage cabinet:
Effective dimensions: D 351 x H 400 x L 260 mm
Shielding: 15 mm of lead

Programmer: controls 1 socket

Adapter kit for sterile gloves

3rd generator: in common generator compartment, with independent slide and lift

Dry contact: information on the machines status

Download the product data sheet at lemerpax.com

Aeraulic

Exhaust air flow rate: 120 m^3/h

Work surface air quality: Class A

Negative pressure inside the hot cell: -180 Pa (+/- 20 %)

Airlock chamber and generator air quality: Class C

Controls: extraction shutdown

Electrical

Supply voltage: 230 V [+/-10%]

Maximum absorbed current / Electrical data / Current consumption: 16 A / 2 Poles+G 50 Hz / 3 A

Interior power sockets: 4 sockets (electrical, RJ45 or USB as required)

Installation requirements

Floor load: 2 300 kg/m²

Door passage width: ≥ 90 cm

Diameter required for air extraction from the hot cell: ø100 mm

Compressed air (service or compressor): 6 bar, 20L/min

Package

Package dimensions: L 2 700 x D 1 200 x H 2 200 mm

Package weight (product without options): 3 800 kg

Ref.: 00027184

EFFECTIVE DIMENSIONS (mm)

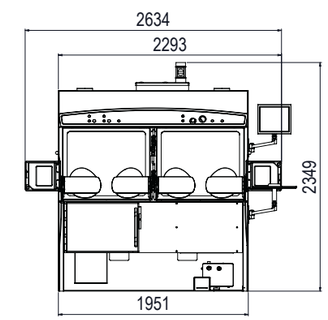

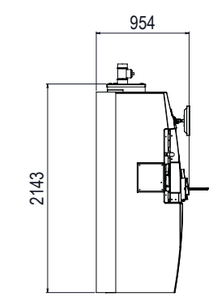

*The dimensions must be confirmed by a layout drawing
**Regulations in ASN Guide No.32 "In vivo nuclear medicine facilities: minimum technical rules for design, operation and maintenance"

MEDI **9000 2R LME**

CLASS **A**

PREPARATION HOT CELL OF RADIOPHARMACEUTICALS

LOW & MEDIUM **ENERGY**

SPECT

ASSOCIATED PRODUCTS

- Scintidose dose calibrators
- Medi 405 dose calibrator
- Cont'Elu elution pots
- PFE/PME vial shield
- PDA support
- Medi handling tongs
- Mediclic syringe shields

The **Medi 9000 hot cell with 2 glove ports** is for **manual preparation** of **low and medium energy** radiopharmaceuticals administered during diagnostic **SPECT** scintigraphic examinations. This hot cell model, with variable height, adapts to the height of the operator with an electro-mechanical lift system (optional). Biological protection is provided by lead (15 mm) and lead glass (54 mm) shields, which guarantee optimal protection of the user during the various elution, radiolabelling, fractionating and measurement operations until the patient dose of radiopharmaceutical is obtained.

The shielding of the hot cell protects the operator from contamination and exposure (full body) to ionising radiation from the radioisotope being handled while ensuring a **particulate Class A** (ISO 5) **laminar air flow** throughout the work space.

REGULATORY FRAMEWORK

The Medi 9000 2R hot cell meets the requirements of the **European machinery 2006/42/EC** and electromagnetic compatibility **2004/108/EC** directives.
Conforms to the requirements of good preparation practices (GPP & GMP) for radiopharmaceutical drugs, subject to the implementation of suitable procedures, jointly with the customer.
In terms of radiation protection, the Medi 9000 2R meets the requirements of the **European Directive 96/29 EURATOM of 29 June 1996**. It guarantees a **dose rate at 5 cm from the walls of less than 25 µSv/h** for the operator.

Also meets the requirements of **the order of 16 January 2015 approving Decision No. 2014-DC-0463 of the French Nuclear Safety Authority (ASN)** mainly concerning the ventilation and negative pressure of the shielded hot cell, the Medi 9000 2R can be immediately connected to the ventilation network, independently of the rest of the building, with a 100 mm diameter suction outlet located on the ceiling of the room. It is fitted with an exhaust fan (measurement at the cell outlet 120 m^3/h, 1.7 m/s) located after the filtration system and allows to obtain a 250 Pa negative pressure inside the cell.

The hot cell is fitted with a self-contained ventilation and filtration system composed of a HEPA inlet filtration and aerosol and active carbon outlet filters.

The different air classes in the cell are qualified in accordance with references set out in **standard ISO 14644**. An ISO 5 class A controlled atmosphere zone (GMP criteria) under laminar flow is provided over the entire surface of the work surface by two fans. The generator compartment and the airlock chambers have an independent air ventilation/filtration system that ensures an ISO 7 air quality in class C (GMP criteria).

FOCUS

The 50 mm lead shielded **generator compartment, with lockable** door for improved security, is equipped with **two independent lifts** compatible with all ^{99}Mo/^{99m}Tc generators and allows for the simultaneous use of two generators for daily elutions.

The 15 mm shielded dose calibrator compartment allows the installation of the measuring device of choice for greater versatility. **Exposure to the user's hands and fingers is considerably reduced** with the automatic sample dipper raising and lowering system available with the Lemer Pax, Medisystem and Capintec **dose calibrators.**

The 15 mm lead shielded **bin compartment** can accommodate any brand of **container**. The bins are removed through the works pace. The top access features a magnetic opening system that is flush with the work surface, to allow for a large, flat work space with no inconvenient handles.

The 316L stainless steel **work surface** allows the installation of the equipment necessary for radiolabelling, such as a stirrer, water bath, etc. The presence of several **power sockets (electrical, USB, RJ45)** allows programming and connection to any software and networks. Storage of accessories and consumables is made easy with the optional hinged shelf. The shielded hot cell is also equipped with two **germicidal UV** lamps with an adjustable timer.

Optional 20 mm lead **shielded lateral air chambers** are available, with an outer lead glass door to control the presence of a source. They are each equipped with a robust stainless steel **sliding tray**, to remove and insert equipment and patient doses. The inner airlock chamber doors are opened and closed with a manually operated mechanical system. **Interlocking** with the outer doors is also available as an option.

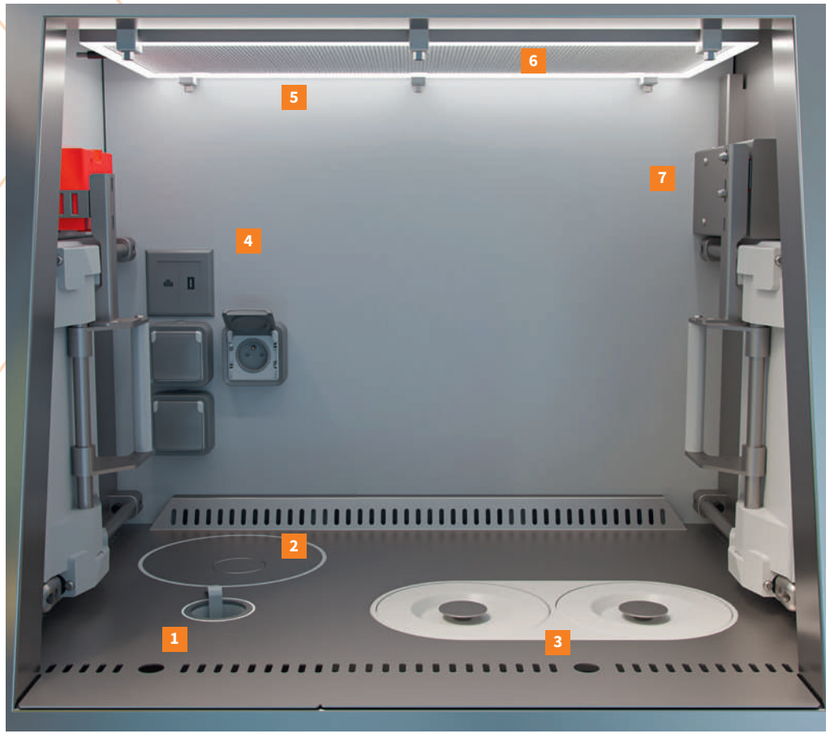

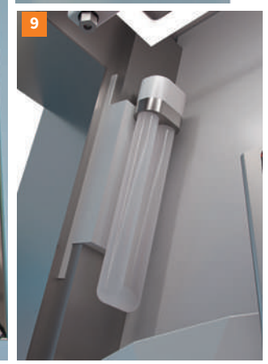

1 | Dose calibrator access **2** | Waste bin access with magnetic opening **3** | 2 independent accesses for 2 generators **4** | Socket emplacements (electrical, USB, RJ45) **5** | LED lighting **6** | Extra-large HEPA filter covering the entire work surface **7** | Interlocking mechanism for the airlock chamber doors optional **8** | 1 shielded lockable compartment for 2 generators, equipped with 2 loading trays and 2 independent lifts **9** | UV germicidal lamp with timer **10** | Sliding transfer tray **11** | Lateral secure airlock chamber

OPTIONS

ELECTRIC HOT CELL LIFT	allows the height of the hot cell to be adjusted to the height of the operator (200 mm stroke).
INTERLOCKING OF AIRLOCK CHAMBER DOORS	to ensure that the air class in the workspace is maintained when equipment is inserted and removed.
HINGED SHELF	facilitates the storage of the various accessories and consumables used on a daily basis, without cluttering the work surface.
SCREEN DISPLAYING DOSE CALIBRATOR MEASUREMENT	positioned in the hot cell, allows for unprecedented working ergonomics for the operator.
PROGRAMMING OF SOCKETS	manages the use of the electrical accessories present on the work surface: water bath, heating unit, etc.
DRY CONTACT	sends information about the operating condition of the machine.
PNEUMATIC DIPPER	system for raising and lowering the sample dipper compatible with Lemer Pax, Medisystem and Capintec dose calibrators.

CHARACTERISTICS

General

External dimensions* 1/2 airlock chambers: L 1 466 /1 878 x D 1 040 x H 2 018 mm

Hot cell tare weight (1/2 airlock chambers): 3 200/3 350 kg

Exterior finish: RAL 9010 painted steel and ABS grain

Interior finish: White Corian and bead blasted stainless steel

Standard equipment:
- 1 airlock chamber
- 1 shielded compartment - 2 generators
- 1 shielded compartment - dose calibrator
- 1 shielded compartment - 1 waste container

Type of lighting: LED

Brightness: > 1 000 Lux

Germicidal UV: 2 x 9W UVC lamps

Noise level: < 67 dB(A)

Shielding thickness: 15 mm of lead

Radiation protection:

Maximum radioactivity that can be handled to obtain a dose rate less than 25 µSv/h at 5 cm from the walls**

Radionuclides	Maximum radioactivity that can be handled
^{99m}Tc	7,07.10^{9} TBq
^{111}In	0,129 TBq
^{201}Tl	1,04,10^{9} TBq
^{177}Lu	0,185 TBq
^{123}I	307 MBq

Calculation conditions: exposed sources in contact with the inner wall of the hot cell

Work surface

Dim. : L 794 x D 600 x H 576 mm

Effective dimensions: L 794 x D 563 x H 576 mm

Work surface height: 1 068 mm

Work surface finish: 316L stainless steel

Shielding thickness: 15 mm of lead

Number of glove ports: 2

Diameter of the glove ports: 156 mm

Glove port axis height: 1 165 mm

Effective dimensions of the standard lead glass viewing window: L 563 x H 405 x Th. 54 mm

Generator compartment:

Internal dimensions of the generator compartment: L 413 x D 437 x H 569 mm

Effective dimensions for each generator: L 177 x D 340 x H 467 mm

Security and closing of the compartment: Lockable door

Shielding thickness: 50 mm of lead

Number of generators: 2

Generator models: Tekcis®, Ultra TechneKow™ (other upon request)

Dose calibrator compartment

Effective dimensions of the dose calibrator compartment: L 236 x H 569 x D 437 mm

Shielding thickness: 15 mm of lead

Dose calibrator brand: Lemer Pax, Medisystem, Capintec, Veenstra

Bin compartment

Effective dimensions of the bin compartment: Ø150 x H 216 mm

Number of bins: 1

Shielding thickness: 15 mm of lead

Removal of the waste container: through the work space

Airlock chamber

Inner dimensions: L 472 x D 213 x H 230 mm

Effective dimensions of the airlock chamber: L 346 x D 213 x H 218 mm

Shielding thickness: 20 mm of lead

Options

Articulated shelf: Effective dimensions: L 300 x D 100 mm

Max. load: 10 kg

Internal measurement display screen: 15 inches

Programmer: controls 1 socket

Interlocking of airlock chambers: adjustable time delay

Electro-mechanical hot cell lift: stroke 200 mm

Pneumatic dipper raising system: compatible with Lemer Pax, Medisystem, Capintec dose calibrators

Dry contact: sending information on machine status

Aeraulic

Exhaust air flow rate: 120 m³/h

Work surface air quality: Class A

Negative pressure inside the hot cell: -160 Pa (+/- 20 %)

Airlock chamber and generator air quality: Class C

Electrical

Supply voltage: 230 V

Maximum absorbed current / Electrical data / Current consumption: 16 A / 2 Poles+G 50 Hz / 3 A

Interior power sockets: 2 power sockets + 1 RJ45 / USB socket

Socket programmer - Option

Ventilation shutdown

Installation requirements

Floor load: 3 000 kg/m²

Door width (complete hot cell): ≥ 1 000 mm

Door width (without ventilation): ≥ 900 mm

Diameter required for air extraction from the hot cell: Ø125 mm

Compressed air (service or compressor): 6 bar, 20 L/min

Package

Package dimensions: 2 packages
L 1 200 x D 1 150 x H 2 400 mm
L 70 x D 70 x H 50 mm

Package weight (product without options): 2 packages: 3 050 kg + 200 kg

Ref.: 11905

Download the product data sheet at lemerpax.com

*The dimensions must be confirmed by a layout drawing
**Regulations in ASN Guide No.32 "In vivo nuclear medicine facilities: minimum technical rules for design, operation and maintenance"

EFFECTIVE DIMENSIONS (mm)

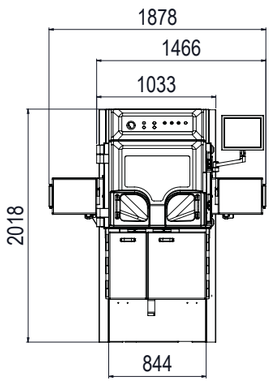

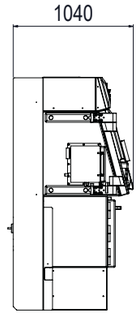

MEDI 9000 **4R LME** CLASS **A**

PREPARATION HOT CELL OF RADIOPHARMACEUTICALS

LOW & MEDIUM **ENERGY**

SPECT

The **Medi 9000 hot cell with 4 glove ports** is for **manual preparation** of **low and medium energy** radiopharmaceutical drugs administered during diagnostic SPECT scintigraphic examinations. This hot cell model, with variable height, adapts to the height of the operator with an electro-mechanical lift system (optional). The Medi 9000 4R shielded hot cell features a very spacious work surface with **two workstations** for one or two users. Biological protection is provided by lead (15 mm) and lead glass (54 mm) shields, which guarantee appropriate protection of the operator during the various elution, radiolabelling, fractionating and measurement operations until the patient dose of radiopharmaceutical is obtained.
The shielding of the hot cell protects the operator from contamination and exposure (full body) to ionising radiation from the radioisotope being handled (^{99m}Tc, ^{201}Tl, ^{111}In, ^{123}I, etc.) while ensuring a particulate **Class A (ISO 5) laminar air flow** throughout the work space.

FOCUS

The 50 mm lead, shielded **generator compartment, with lockable** door for improved security, is composed of **two independent lifts** compatible with all ^{99}Mo/^{99m}Tc generators and allows for the simultaneous use of two generators for daily elutions.

The 15 mm shielded dose calibrator compartment allows the installation of the measuring device of choice for greater versatility. Exposure to the user's hands and fingers is considerably reduced with the automatic sample dipper raising and lowering system, available with the Lemer Pax, Medisystem and Capintec dose calibrators.

The 15 mm lead shielded lockable **waste compartment**, accessible under the work surface, can accommodate two independent containers of any brand, to facilitate waste separation. They are removed from the front.

A fourth shielded compartment is also available as **an option.** It can be used as a long-life source **storage cabinet** or converted into an access for a **third generator** or as a **"front" air chamber** allowing any shielded pot or particularly heavy accessory to be transported **directly to the work surface.**

The 316L stainless steel spacious work surface allows the installation of the equipment necessary for radiolabelling, such as a stirrer, water bath, etc. The presence of several **power sockets (electrical, USB, RJ45)** allows programming and connection to any software and networks. A **transfer tray** installed on a dual exit slide, allows the effortless passage of vial shields or other accessories, from one workstation to another (left/right). Storage of accessories and consumables is made easy with the optional hinged shelf.
The shielded hot cell is also equipped with two **germicidal UV** lamps with an adjustable timer.

Optional 20 mm lead **shielded lateral air chambers** are available, with an outer lead glass door to control the presence of a source. They are each equipped with a robust stainless steel sliding tray, to remove and insert equipment and patient doses. Theair chambers' inner doors are opened and closed with a manually-operated mechanical system. Interlocking with the outer doors is available as an option.

ASSOCIATED PRODUCTS

- Medi 405 dose calibrator
- Cont'Elu elution pots
- PFE/PME vial shields
- PDA support
- Medi handling tongs
- Mediclic syringe shields

REGULATORY FRAMEWORK

The Medi 9000 4R shielded hot cell meets the requirements of the **European machinery 2006/42/EC** and electromagnetic compatibility **2004/108/EC** directives.
It makes it possible to meet the requirements of good preparation practices (GPP & GMP) for radiopharmaceutical drugs, subject to the implementation of suitable procedures, jointly with the customer.

In terms of radiation protection, the Medi 9000 4R meets the requirements of the European Directive 96/29 EURATOM of 29 June 1996. It guarantees a **dose rate at 5 cm from the walls of less than 25 µSv/h** for the operator.
In order to also meet the requirements of **the order of 16 January 2015 approving Decision No. 2014-DC-0463 of the French Nuclear Safety Authority (ASN)** mainly concerning the ventilation and negative pressure of the shielded hot cell, the Medi 9000 4R can be immediately connected to the ventilation network, independently of the rest of the building, with a 100 mm diameter suction outlet located on the ceiling of the room. It is fitted with an exhaust fan (measurement at the cell outlet 120 m^3/h, 1.7 m/s) located after the filtration system and allows to obtain a 250 Pa negative pressure inside the cell.

The hot cell is fitted with a self-contained ventilation and filtration system composed of a HEPA inlet filtration and aerosol and active carbon outlet filters.

The different air classes in the enclosure are measured in accordance with the ISO 14644 standard. An ISO 5 class A controlled atmosphere zone (GMP criteria) under laminar flow is provided over the entire surface of the work surface by two fans. The generator compartment and the air chambers have an independent air ventilation/filtration system that ensures an ISO 7 air quality in class C (GMP criteria).

1 | Control panel **2** | Extra-large HEPA filters covering the entire work surface and LED lighting **3** | Manual opening system of the airlock chamber inner sliding door **4** | 2 generator access points **5** | Electrical, USB and RJ45 sockets **6** | Hinged shelf **7** | Sliding transfer tray **8** | Dose calibrator chamber access **9** | Airlock chamber sliding tray for transfer of accessories and consumables **10** | Pneumatic dipper raising system (optional) **11** | Lead glass lateral airlock chamber (optional) **12** | Front airlock chamber (optional) **13** | Electric hot cell lift (optional)

OPTIONS

ELECTRIC HOT CELL LIFT	allows the height of the hot cell to be adjusted to the height of the operator (200 mm stroke).
FRONT AIR CHAMBER	for effortless insertion of shielded pots or particularly heavy accessories directly onto the work surface.
INTERLOCKING OF AIR CHAMBER	ensures that the air class in the work space is maintained when equipment is inserted and removed.
HINGED SHELF	facilitates the storage of the various accessories and consumables used during daily activities without cluttering the work surface.
SCREEN DISPLAYING DOSE CALIBRATOR MEASUREMENT	positioned in the bottom of the hot cell, allows for unprecedented working ergonomics for the operator.
OUTLET PROGRAMMER	allows to manage the use of the electrical accessories present on the work surface: water bath, heating unit, etc.

EFFECTIVE DIMENSIONS (mm)

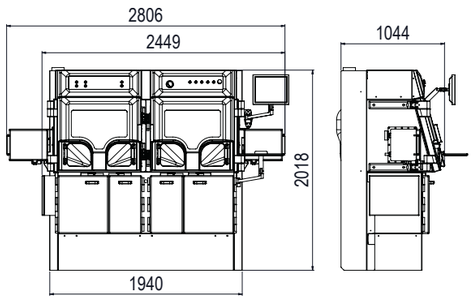

CHARACTERISTICS

LOW & MEDIUM **ENERGY**

General

External dimensions* (1/2 airlock chambers): L 2 449/2 806 x D 1 044 x H 2 018 mm

Hot cell tare weight (1/2 airlock chambers): 4 762/4 912 kg

Exterior finish: painted steel + ABS

Interior finish: white Corian bottom and stainless steel sides on the int/ext door side

Standard equipment:
- 1 airlock chamber
- 1 shielded compartment - 2 generators
- 1 shielded compartment - dose calibrator
- 1 shielded compartment - 2 waste bins
- 1 compartment for option of choice

Type of lighting: LED

Brightness: > 1 000 Lux

Germicidal UV: 2 x 9W UVC lamps

Noise level: < 67 dB(A)

Shielding thickness: 15 mm of lead

Radiation protection:

Maximum radioactivity that can be handled to obtain a dose rate less than 25 µSv/h at 5 cm from the walls**

Radionuclides	Maximum radioactivity that can be handled
^{99m}Tc	7,07.10^{9} TBq
^{111}In	0,129 TBq
^{201}Tl	1,04,10^{9} TBq
^{177}Lu	0,185 TBq
^{123}I	307 MBq

Calculation conditions: exposed sources in contact with the inner wall of the hot cell

Work surface

Dim. : L 1 705 x D 588 x H 581 mm

Effective dimensions: L 1 705 x D 553 x H 581 mm

Work surface height: 1 070 mm

Work surface finish: 316L stainless steel

Shielding thickness: 15 mm of lead

Number of glove ports: 4

Diameter of the glove ports: 156 mm

Glove port axis height: 1 165 mm

Lead glass viewing windows: 2 windows Dimensions: L 563 x H 405 x Th. 54 mm

Generator compartment

Internal dimensions of the generator compartment: L 413 x D 437 x H 560 mm

Effective dimensions for each generator: L 180 x D 300 x H 360 mm

Security and closing of the compartment: door with key lock

Shielding thickness: 50 mm of lead

Number of generators: 2 (3rd optional)

Generator models: Tekcis®, Ultra TechneKow™ (other upon request)

Dose calibrator compartment

Effective dimensions of the dose calibrator compartment: L 413 x D 437 x H 560 mm

Shielding thickness: 15 mm of lead

Dose calibrator brand: Lemer Pax, Medisystem, Capintec, Veenstra

Waste bin compartment

Effective dimensions of the bin compartment: L 310 x D 437 x H 560 mm

Number of bins: 2

Shielding thickness: 15 mm of lead

Removal of the waste bins: front access door

Airlock chamber

Inner dimensions: L 475 x D 214 x H 232 mm

Effective dimensions: L 406 x D 134 x H 219 mm

Shielding thickness: 20 mm of lead

Options

Hot cell lift: stroke 200 mm

Front airlock chamber: Ø180 x H 190 mm

Interlocking of airlock chamber

Articulated shelf: 1 or 2 Effective dimensions: L 300 x D 100 mm max load: 10 kg

Internal measurement display screen: 15 inches

Programmer: controls 1 socket

Pneumatic dipper raising system: compatible with Lemer Pax, Medisystem, Capintec dose calibrators

Dry contact: information on the machines status

Aeraulic

Exhaust air flow rate: 120 m^3/h

Work surface air quality: Class A

Negative pressure inside the hot cell: -160 Pa (+/- 20 %)

Airlock chamber and generator air quality: Class C

Electrical

Supply voltage: 230 V [+/-10%]

Maximum absorbed current / Electrical data / Current consumption: 16 A / 2 Poles+G 50 Hz / 3 A

Interior power sockets: 4 sockets (electrical, RJ45 or USB as required)

Installation requirements

Floor load: 4 300 kg/m^2

Door passage width: ≥ 90 cm

Diameter required for air extraction from the hot cell: Ø125 mm

Compressed air (service or compressor): 6 bar , 20L/min

Package

Package dimensions:
1 packages: L 2 600 x D 1 200 x H 2 400 mm
2 packages: L 2 250 x D 1 150 x H 2 400 mm
L 2 250 x D 1 150 x H 1 680 mm

Package weight (product without options):
1 packages: 5 200 kg
2 packages: 2 500 kg + 2 700 kg

Ref.: 00034075

Download the product data sheet at lemerpax.com

* The dimensions must be confirmed by a layout drawing
**Regulations in ASN Guide No.32 "In vivo nuclear medicine facilities: minimum technical rules for design, operation and maintenance"

MEDI 2000 **4R LME** CLASS **C**

HOT CELL FOR THE PREPARATION OF RADIOPHARMACEUTICALS

LOW & MEDIUM **ENERGY**

SPECT

ASSOCIATED PRODUCTS

- Medi 405 dose calibrator
- Cont'Elu elution pots
- PFE/PME vial shields
- PDA support
- Medi handling tongs
- Mediclic syringe shields

REGULATORY FRAMEWORK

The Medi 2000 4R shielded hot cell meets the requirements of the **European machinery 2006/42/EC** and electromagnetic compatibility **2004/108/EC** directives.
It makes it possible to meet the requirements of good preparation practices (GPP & GMP) for radiopharmaceutical drugs, subject to the implementation of suitable procedures, jointly with the customer.
In terms of radiation protection, the Medi 2000 4R meets the requirements of the European Directive 96/29 EURATOM of 29 June 1996. It guarantees a **dose rate at 5 cm from the walls of less than 25 µSv/h** for the operator.

In order to also meet the requirements of the **order of 16 January 2015 approving Decision No. 2014-DC-0463 of the French Nuclear Safety Authority (ASN)** mainly concerning the ventilation and negative pressure of the shielded hot cell, the Medi 2000 4R can be immediately connected to the ventilation network, independently of the rest of the building, with a 100 mm diameter suction outlet located on the ceiling of the room. It is fitted with an exhaust fan (measurement at the cell outlet 120 m^3/h, 1.7 m/s) located after the filtration system and allows to obtain a 250 Pa negative pressure inside the cell.

The hot cell is fitted with a self-contained ventilation and filtration system composed of a HEPA inlet filtration and aerosol and active carbon outlet filters.
The air classes in the cell are measured in accordance with **standard ISO 14644**. An ISO 7 **Class C** controlled atmosphere zone (GMP criteria) is provided by a fan along the width of the work surface. The generator compartment features an independent air ventilation/filtration system ensuring the Class C air quality (GMP criteria).

The **Medi 2000 hot cell with 4 glove ports** is for **manual preparation**, offering the operator a **class C** (ISO 7) working environment, for the preparation of **low and medium energy radiopharmaceuticals**, administered during **SPECT** scintigraphic examinations. It allows the handling of radioisotopes most widely used on a routine basis including: ^{99m}Tc, ^{201}Tl, ^{111}In, ^{123}I, etc. Biological protection is provided by lead (15 mm) and lead glass (48 mm) shields, which guarantee appropriate protection of the operator during the various elution, radiolabelling, fractionating and measurement operations until the patient dose of radiopharmaceutical is obtained. Its reduced dimensions (L 1 700 x D 830 x H 1 620 mm) and weight (2 500 kg) make it the smallest four-glove port shielded hot cell on the market, and a strong asset in managing floor load issues in laboratories.

FOCUS

The generator compartment in the lower section is protected with a 50 mm lead shield. **It features a lockable** door for improved security, is equipped with two independent lifts compatible with all ^{99}Mo/^{99m}Tc generators and allows for the simultaneous use of two generators for the preparation of daily elutions.

The 15 mm shielded dose calibrator compartment allows the installation of the measuring device of choice for greater versatility. Exposure to the user's hands and fingers is considerably reduced with the automatic sample dipper raising and lowering system available with the Lemer Pax, Medisystem and Capintec dose calibrators.

The 15 mm lead shielded lockable **waste compartment**, accessible under the work surface, can accommodate **two independent containers** of any brand, **to facilitate waste separation**. They are removed from the front. The two independent accesses on the work surface are magnetic openings flush with the work surface to preserve a large available space and without inconvenient handles for the different handling operations.

The white, UV-resistant PVC **work surface** allows for easy disinfection and decontamination. The presence of several **sockets (electrical, USB, RJ45)** allows the installation of the equipment necessary for radiolabelling such as stirrers, water baths, etc. The very wide lead glass viewing window (48 mm) (L 1 176 x W 234 mm) extends over the entire width of the work surface and thus allows perfect viewing of the entire work space. Additional ergonomics are provided by the 45° angle of the wide window which, combined with the low height of the enclosure (1 620 mm), allows for comfortable working conditions for operators of all heights.
Storage of accessories and consumables can be facilitated with the optional hinged shelf.
The shielded hot cell is also equipped with two **germicidal UV** tubes with adjustable timer.

The lateral air chambers with a 20 mm lead shield, are each equipped with a robust stainless steel sliding tray, to remove and insert equipment and patient doses.
The air chamber inner doors are opened and closed with a manually-operated mechanical system.

1 | 2 Independent accesses for 2 generators **2** | Access to the dose calibrator chamber **3** | Choice of electrical, USB and RJ45 sockets **4** | 2 UV germicidal tubes **5** | 2 independent accesses for 2 waste bins **6** | 2 independent slide trays with lifts for 2 generators **7** | Waste compartment **8** | Storage or decay area **9** | Very high efficiency filter **10** | Airlock chamber inner shielded door with manual opening handle **11** | Lateral shielded airlock chamber with front opening and integrated sliding tray

OPTIONS

SECOND 20 MM LEAD SHIELDED LATERAL AIR CHAMBER	allows to insert and remove equipment within the work surface.
HINGED SHELF	facilitates the storage of the various accessories and consumables used on a daily basis, without cluttering the work surface.
OUTLET PROGRAMMER	allows the management of the electrical accessories present on the work surface: water bath, heating unit, etc.

CHARACTERISTICS

General

External dimensions* (1/2 airlock chambers): L 1 692/2 064 x D 840 x H 1 620 mm

Hot cell tare weight (1 airlock chamber): 2 500 kg

Exterior finish: Painted steel white RAL 9010

Interior finish: White anti-UV PVC

Standard equipment:
- 1 right-hand airlock chamber
- 1 shielded compartment - 2 generators
- 1 shielded compartment - dose calibrator
- 1 shielded compartment - 2 waste bins

Type of lighting: LED

Brightness: > 1 000 Lux

Germicidal UV: 2 x 9W UVC tubes

Noise level: < 67 dB(A)

Shielding thickness: 15 mm of lead

Radiation protection:

Maximum radioactivity that can be handled to obtain a dose rate less than 25 µSv/h at 5 cm from the walls**

Radionuclides	Maximum radioactivity that can be handled
^{99m}Tc	7,07.10^{9} TBq
^{111}In	0,129 TBq
^{201}Tl	1,04,10^{9} TBq
^{177}Lu	0,185 TBq
^{123}I	307 MBq

Calculation conditions: exposed sources in contact with the inner wall of the hot cell

Work surface

Dim. : L 1 250 x D 543 x H 424 mm

Effective dimensions: L 1 122 x D 543 x H 424 mm

Work surface height: 1 019 mm

Work surface finish: White anti-UV PVC

Shielding thickness: 15 mm of lead

Number of glove ports: 4

Diameter of the glove ports: 156 mm

Glove port axis height: 1 135 mm

Lead glass viewing window dimensions: L 1 176 x l 234 x Th. 48 mm

Generator compartment:

Inner dimensions of the compartment: L 398 x D 437 x H 541 mm

Effective dimensions for each generator: L 180 x D 350 x H 400 mm

Security and closing of the compartment: lockable door

Shielding thickness: 50 mm of lead

Number of generators: 2

Generator models: Tekcis®, Ultra TechneKow™ (other upon request)

Dose calibrator compartment

Effective dimensions: L 310 x D 437 x H 600 mm

Shielding thickness: 15 mm of lead

Dose calibrator brand: Lemer Pax, Medisystem, Capintec, Veenstra

Waste bin compartment

Effective dimensions: L 209 x D 203 x H 600 mm

Number of bins: 2

Shielding thickness: 15 mm of lead

Removal of the waste bins: front access door

Airlock chamber

Inner dimensions: L 336 x D 437 x H 250 mm

Effective dimensions: L 270 x D 128 x H 228 mm

Shielding thickness: 15 mm of lead

Options

Second lateral airlock chamber: 20 mm lead shielding

Articulated shelf: Effective dimensions: L 300 x D 100 mm maximum load: 10 kg

Programmer: controls 1 socket

Pneumatic dipper raising system: compatible with Lemer Pax, Medisystem, Capintec dose calibrators

Aeraulic

Exhaust air flow rate: 100 m³/h

Work surface air quality: Class C

Negative pressure inside the hot cell: -160 Pa (+/- 20 %)

Generator compartment air quality: Class C

Electrical

Supply voltage: 230 V [+/-10%]

Maximum absorbed current / Electrical data / Current consumption: 16 A / 2 Poles+G 50 Hz / 3 A

Interior power sockets: 2 power sockets + 1 RJ 45 / USB socket

Installation requirements

Floor load: 3 750 kg/m²

Door passage width: > 90 cm

Diameter required for air extraction from the hot cell: Ø100 mm

Compressed air (service or compressor): 6 bar, 20 L/min

Package

Package dimensions (1/2 airlock chambers): L 1 900/2 210 x D 1 000 x H 2 000 mm

Package weight (product without options): 2 750 kg

Ref.: 00034042

Download the product data sheet at lemerpax.com

EFFECTIVE DIMENSIONS (mm)

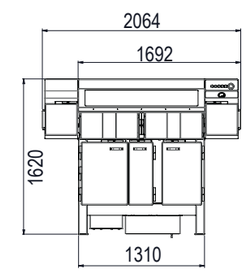

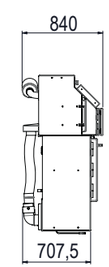

* The dimensions must be confirmed by a layout drawing
**Regulations in ASN Guide No.32 "In vivo nuclear medicine facilities: minimum technical rules for design, operation and maintenance"

PSMEB

CLASS **A**

MICROBIOLOGICAL SAFETY CABINET FOR THE PREPARATION OF RADIOPHARMACEUTICALS

LOW & MEDIUM **ENERGY**

SPECT

- **PSMEB 5-1200:** shielding with a lead equivalent of 5 mm and 1 200 mm length
- **PSMEB 10-1200:** shielding with a lead equivalent of 10 mm and 1 200 mm length
- **PSMEB 15-1200:** shielding with a lead equivalent of 15 mm and 1 200 mm length
- **PSMEB 25-1200:** shielding with a lead equivalent of 25 mm and 1 200 mm length

REGULATORY FRAMEWORK

The PSMEBs are type II microbiological safety cabinets designed and built to the performance requirements of European standard EN-12469 which means that 70 % of the air is recycled through the main HEPA H14 filter in the hood, and the remaining 30 % is extracted through a HEPA H14 exhaust filter (and active carbon filter as an option).
These laminar flow hoods are suitable for all pathogen handling operations.

Furthermore, the shielded microbiological safety cabinet was designed and developed **in compliance with the following international standards:** Machinery directive 2006/42, Electromagnetic Compatibility directives 2014/30/UE.
The **air quality** within the working environment is **classified as ISO 5** or **class A** and is measured in accordance per the standard **EN-14644**.

ASSOCIATED PRODUCTS

- Scintidose dose calibrator
- Medi 405 dose calibrator
- Cont'Elu elution pots
- PFE/PME vial shields
- PDA support
- Positong handling tongs
- Easyview syringe shields

The PSMEB or shielded microbiological safety cabinet is equipped with a sliding protective screen made of lead glass suitable for performing: **radioisotope cell labelling, ^{99}Mo/^{99m}Tc generator elutions**, kit reconstitution and **radiolabelling**, in particular with the following radioisotopes: ^{99m}Tc, ^{201}Tl, ^{111}In, ^{123}I. This **radiation protected laminar flow hood** also allows for the fractionating of patient doses of **SPECT** radiopharmaceuticals used in **nuclear medicine** in an **ISO 5 (class A)** working environment.
Radiation protection is provided by different thicknesses of lead shielding, depending on the PSMEB model selected (ranging from 5 to 25 mm). To guarantee uniform whole -body protection for the user, the PSMEB features a mobile lead glass window, 30 to 80 mm thick, depending on the model selected, which can be displaced easily to adapt to the users needs.

The PSMEB offers **unrivalled ergonomics**, as the operator is free to **choose the most comfortable working position** (standing or sitting), made possible by the space available under the work surface.

FOCUS

The 316L stainless steel **work surface** allows the installation of the equipment necessary for cell labelling, generator elutions, and radiolabelling, such as an agitator, water heater, etc.
The neon-lit work area is secured by an **electrically operated sliding front window** in laminated glass.
The PSMEB control and the continuous digital display of the operating parameters are ensured by a dedicated microprocessor. The PSMEB is also equipped with a **germicidal UV** tube with adjustable time delay mounted on a magnetic base. An expandable window seal is provided on the front panel in case of fumigation.

The 30, 40, 55 or 80 mm thick **lead glass sliding screen** is removable and retractable. It is mounted on a ball bearing track, which allows for effortless movement.

The optional 50 mm lead shielded **generator compartment, with a lockable** door for improved security, is equipped with **two independent lifts** compatible with all ^{99}Mo/^{99m}Tc generators and allows for the simultaneous use of two generators for daily elutions.

The 15 or 25 mm shielded **dose calibrator compartment**, depending on the model, is also available as an option and allows to install the Scintidose measuring device distributed by the Lemer Pax & Medisystem group. The exposure of the hands and fingers is considerably reduced thanks to the "Posilift", an innovative system of automatic raising and lowering of the dose calibrator sample dipper (optional).

The optional 15 or 25 mm lead shielded **waste compartment**, depending on the model, can accommodate a 165 mm diameter and 220 mm high container. Removal is performed from the inside of the workspace to ensure full-body radiation protection and has two openings: total and partial with a magnetic system (on request), the latter allowing the radiation cone to be limited to the strict minimum.

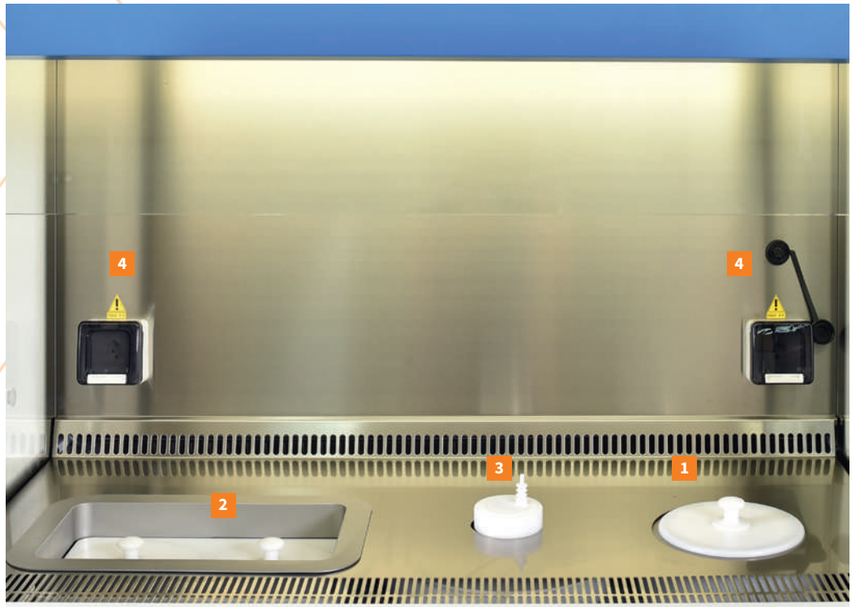

1 | 1 waste bin **2** | 2 independent accesses for each generator **3** | 1 access for the dose calibrator **4** | 2 socket emplacements (electrical, USB, RJ45) **5** | 1 shielded lockable compartment for 2 generators, equipped with 2 loading trays and 2 independent lifts **6** | Access to the waste compartment from the work surface **7** | Sliding, removable and retractable lead glass screen **8** | Posilift system (raising and lowering of the dose calibrator dipper by foot control)

OPTIONS

POSILIFT	automatic and pneumatic system for raising and lowering the sample diper of the Scintidose dose calibrator using the foot control
ACTIVE CARBON FILTER	characteristics as required
DRY CONTACT	to send information on the machine's operating status

EFFECTIVE DIMENSIONS (mm)

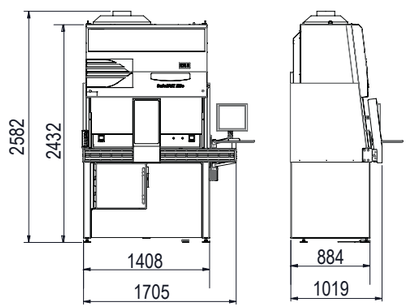

CHARACTERISTICS

General

Overall dimensions*:
L 1 705 x D 1 019 x H 2 582 mm

Hood weight:	All options	Empty
PSMEB 5-1200 model:	1 900 kg	900 kg
PSMEB 10-1200 model:	2 000 kg	1 050 kg
PSMEB 15-1200 model:	2 300 kg	1 450 kg
PSMEB 25-1200 model:	2 750 kg	1 750 kg

Exterior finish:
Painted steel white RAL 9010

Interior finish: 316L brushed stainless steel

Lead glass viewing window:
1 sliding window (density 4.36)
Effective dimensions of window PSMEB 5-1200 model: L 270 x H 489 x Th. 30 mm
Effective dimensions of window PSMEB 10-1200 model: L 270 x H 489 x Th. 40 mm
Effective dimensions of window PSMEB 15-1200 model: L 270 x H 489 x Th. 55 mm
Effective dimensions of window PSMEB 25-1200 model: L 270 x H 489 x Th. 80 mm

Optional equipment:
- 1 shielded compartment - 2 generators
- 1 shielded compartment - dose calibrator
- 1 shielded compartment - 1 waste container

Type of lighting: Neon

Brightness: > 1 000 Lux

Germicidal UV: 1 magnetic UVC bulb 15W

Noise level: < 54 dB(A)

Shielding thickness: 5/10/15/25 mm lead depending on the model

Work surface

Dim. : L 1 198 x D 610 x H 740 mm

Effective dimensions: L 1 198 x D 580 x H 740 mm

Work surface height: 1 010 mm

Work surface finish: 316L stainless steel

Shielding thickness: 5/10/15/25 mm lead depending on the model

Generator compartment (optional)

Internal dimensions of the generator compartment: L 369 x D 390 x H 410 mm

Effective dimensions for each generator: L 180 x D 350 x H 364 mm

Security and closing of the compartment: lockable door

Shielding thickness: 50 mm of lead

Number of generators: 2

Generator models: Tekcis®, Ultra TechneKow™ (other upon request)

Dose calibrator compartment (optional)

Effective dimensions of the dose calibrator compartment: Ø220 x H 460 mm

Shielding thickness:
- 15 mm lead (PSMEB 5-1200/ PSMEB 10-1200/PSMEB 15-1200)
- 25 mm lead (PSMEB 25-1200)

Dose calibrator brand: Lemer Pax

Waste compartment (optional)

Effective dimensions of the bin compartment: Ø165x H 220 mm

Number of bins: 1

Shielding thickness:
- 15 mm lead (PSMEB 5-1200/ PSMEB 10-1200/PSMEB 15-1200)
- 25 mm lead (PSMEB 25-1200)

Removal of the waste container: from inside the hood on the work surface

Other options

Posilift : automatic and pneumatic system dedicated to the Lemer Pax Scintidose dose calibrator

Active carbon filter: several models available

Dry contact: information on the machines status

Aeraulic

Exhaust air flow rate: 500 m³/h

Work surface air quality: Class A

Generator compartment air quality: Class C

Electrical

Supply voltage: 250 V / 50 Hz

Maximum power consumption: 1 370 W

Interior power sockets: 2 power sockets (230 V, 50 Hz, 4 A)

Installation requirements

Floor load: between 1,600 and 2,240 kg/m² depending on model

Door passage width: > 90 cm

Diameter / Flowrate required for air extraction from the enclosure:
200 mm / 500 m³/h

Compressed air (service or compressor):
6 bar, 20 L/min (if Posilift option)

Package

Delivered disassembled, at least 3 packages

Package dimensions: Contact us

Package weight (product without options)**:**
PSMEB 5-1200: 2 150 kg
PSMEB 10-1200: 2 250 kg
PSMEB 15-1200: 2 550 kg
PSMEB 25-1200: 3 000 kg

Ref.: 00033544 / 00012997 / 00025884 / contact us

Radiation protection

Maximum radioactivity that can be handled to obtain a dose rate less than 25 µSv/h at 5 cm from the walls**

Radionuclides	Maximum radioactivity that can be handled		
	with 15 mm shielding	with 10 mm shielding	with 5 mm shielding
^{99m}Tc	7,01.109 TBq	7,56.104 TBq	0,659 TBq
^{111}In	0,129 TBq	2,81 GBq	60,7 MBq
^{201}Tl	1,04,109 TBq	15 500 TBq	0,23 TBq
^{177}Lu	0,19 TBq	23,3 GBq	1,29 GBq
^{123}I	307 MBq	132 MBq	56,2 MBq

Calculation conditions: exposed sources in contact with the inner wall of the mobile shield of the PSMEB

Download
the product data sheet
at lemerpax.com

* The dimensions must be confirmed by a layout drawing
**Regulations in ASN Guide No.32 "In vivo nuclear medicine facilities: minimum technical rules for design, operation and maintenance"

EASY**PHARMA HE** CLASS **A**

RADIOPHARMACEUTICAL MANUAL PREPARATION HOT CELL

HIGH **ENERGY**

PET

The **Easypharma HE shielded hot cell with 2 glove ports** is for **manual preparation** of **high energy** radiopharmaceuticals. It is **extremely compact**, and fits perfectly in radiopharmacies or hot labs to prepare patient doses for **PET** examinations. It mainly allows for **fractionating of ready-to-use radiopharmaceuticals** labelled with **^{18}F** and **^{68}Ga**. It is also designed for the measurement of **Iodine-131** capsules for **therapy** in a **controlled, secure** and ventilated **environment**.

Biological protection is provided by **lead (40 mm)** and **lead glass (120 mm) screens** which guarantee the appropriate protection of the operator during daily applications and from contamination and exposure (full-body) to ionising radiation from the radioisotope handled (^{18}F, ^{68}Ga, ^{131}I, etc.) while guaranteeing a **class A** laminar air **flow (ISO 5)** in the entire work area.

FOCUS

The easily decontaminated 316L stainless steel **work surface** offers a simple layout of the elements required for fractionating of ready-to-use radiopharmaceuticals. **The UV germicidal** tubes are also available with a UV C tube with a configurable timer. Storage of accessories and consumables is made easy with the optional hinged shelf.

The 40 mm lead shielded dose calibrator compartment allows the installation of the **measuring device** as required for improved **versatility**. The automatic dipper raising system option allows to **reduce operator exposure** and provides **unparalleled freedom of movement**.

The lockable source compartment with a 40 mm lead shield, for improved **security**, contains an **electrical lift** for handling heavy loads, **compatible** with **many** multi-dose **vial transport pots**. Thus, the radiopharmaceutical vial is lifted directly to the work surface, ready for measurement and fractionating.

The two waste compartments with a 40 mm lead shield facilitate **waste sorting** and allow for the decay of the remaining products in the used vials. **Partial opening of the magnetic cap significantly reduces exposure to** the hands and fingers during handling operations in the work space.

The shielded lateral airlock chambers (20 mm lead), also available as a "large airlock chamber" option to accommodate carrier cases for improved radiation protection of users, are each equipped with a **robust** stainless steel **sliding tray**, allowing to insert and remove equipment and patient doses. For enhanced **security**, the inner and outer door openings are **interlocked**.

ASSOCIATED PRODUCTS

- Exposure reduction cover
- Positong handling tongs
- Crocobox carrier
- Manubox trolley

REGULATORY FRAMEWORK

The Easypharma HE hot cell meets the requirements of the **European machinery 2006/42/EC** and electromagnetic compatibility **2004/108/EC** directives. It is **suitable** for sale in the **US market** and meets the recommendations and standards mentioned in the USP (U.S PHARMACOPEIA) General Chapter 825 **"Radiopharmaceuticals: Preparation, Compounding, Dispensing and Repackaging"** from **USP 42-NF37** as well as the requirements of the **Good Preparation Practices** (GPP & GMP) for radiopharmaceutical drugs, subject to the joint implementation of suitable procedures with the customer.

In terms of radiation protection, the Easypharma HE meets the requirements of the **European Directive 96/29 EURATOM of 29 June 1996**. It guarantees a **dose rate at 5 cm from the walls of less than 25 µSv/h** for the operator. In order to also meet the requirements of **the order of 16 January 2015 approving Decision No. 2014-DC-0463 of the French Nuclear Safety Authority (ASN)** mainly concerning the ventilation and negative pressure of the shielded hot cell, the Easypharma HE can be immediately connected to the ventilation network, independently of the rest of the building, with a 100 mm diameter suction outlet located on the ceiling of the room. It is fitted with an exhaust fan (measurement at the cell outlet 120 m^3/h, 1.7 m/s) located after the filtration system and allows to obtain a 250 Pa negative pressure inside the cell.

The hot cell is fitted with a self-contained ventilation and filtration system composed of a HEPA inlet filtration and aerosol and active carbon outlet filters.

Class A controlled atmosphere zone **(GMP criteria)** under laminar flow is provided along the length of the work surface by two fans. The generator compartment and the air chambers feature an independent air ventilation/filtration system ensuring the **Class C** air quality **(GMP criteria)** or **class 10000/ISO 7 (USP criterion 825)**. The different air classes in the cell are measured in accordance with **standard ISO 14644 or US FS 209D**.

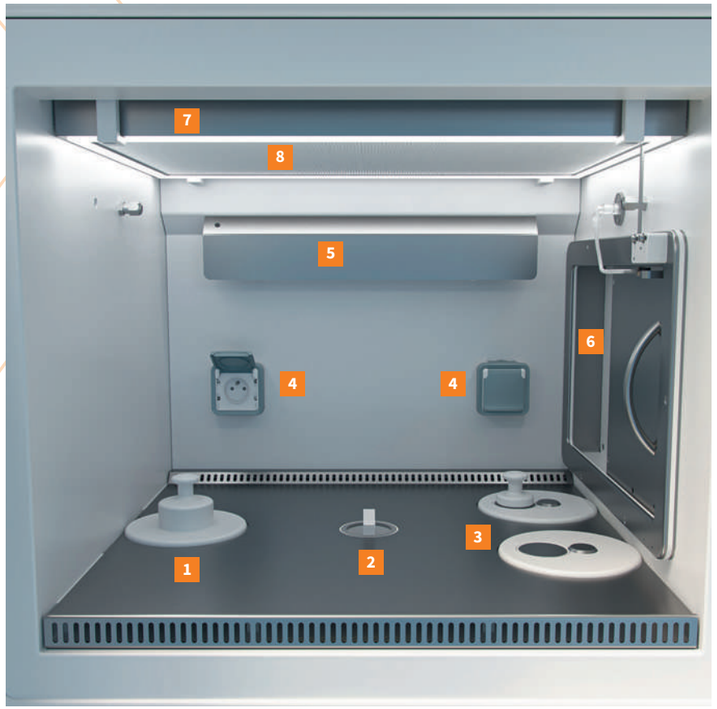

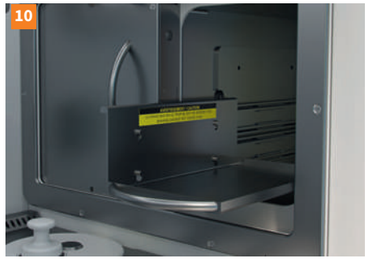

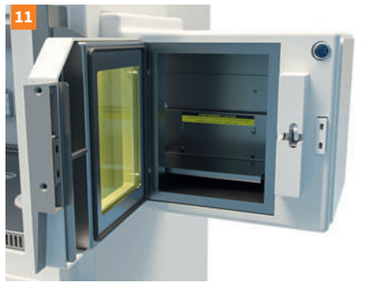

1 | Pot access with magnetic opening **2** | Dose calibrator chamber access with dipper **3** | 2 independent bin accesses with full and partial magnetic opening **4** | Socket emplacements: electrical, USB, RJ45 **5** | UV germicidal tube with timer **6** | Lateral airlock chamber access foot-operated with compressed air **7** | LED lighting **8** | HEPA filter **9** | Shielded pot compartment with sliding tray and lift **10** | Transfer sliding tray **11** | Shielded airlock chamber with lead glass window and sliding tray

OPTIONS

HINGED SHELF	acilitates the storage of the various accessories and consumables used on a daily basis without cluttering the work surface.
LARGE AIRLOCK CHAMBER WITH WINDOW	allows to accommodate the carrier cases and accessories or sources in transit to be checked.
POSILIFT	pneumatic dipper raising system compatible with all Lemer Pax and Medisystem dose calibrators.
SCREEN DISPLAYING DOSE CALIBRATOR MEASUREMENT	positioned in the bottom of the hot cell, allows for unprecedented working ergonomics for the operator.
SOCKET PROGRAMMER	allows to manage the use of the electrical accessories present on the work surface: water bath, heating unit, etc.
ADAPTOR KIT FOR STERILE GLOVES	allows to guarantee optimal hygiene in the work area.

EFFECTIVE DIMENSIONS (mm)

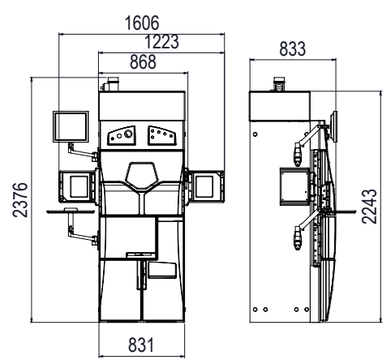

CHARACTERISTICS

General

External dimensions* (1/2 airlock chambers): L 1 223/1 606 x D 833 x H 2 243 mm

Hot cell tare weight (1/2 airlock chambers): 2 800/2 900 kg

Exterior finish: ABS

Interior finish: PVC

Standard equipment:
- 1 airlock chamber
- 1 shielded compartment - pot with lift
- 1 shielded compartment - dose calibrator
- 2 shielded housings (1 bin each)

Type of lighting: LED

Brightness: > 1 000 Lux

Germicidal UV: 1 UV C 8W tube with timer

Noise level: < 63 dB(A)

Shielding thickness: 40 mm of lead

Radiation protection:

Maximum radioactivity that can be handled to obtain a dose rate less than 25 µSv/h at 5 cm from the walls**

Radionuclides	Maximum radioactivity that can be handled
^{18}F	97,9 GBq
^{131}I	71 GBq
^{68}Ga	3,22 GBq
^{177}Lu	$5,55.10^{9}$ TBq

Calculation conditions: sources positioned in a 30 mm lead pot

Work surface

Total dimensions: L 616 x D 574 x H 453 mm

Effective dimensions: L 610 x D 517 x H 440 mm

Work surface height: 1 124 mm

Work surface finish: Stainless steel 316 L

Shielding thickness: 40 mm of lead

Number of glove ports: 2

Diameter of the glove ports: Ø 156 mm

Glove port axis height: 1 200 mm

Effective dimensions of the standard lead glass viewing window: L 297 x H 243 x Th. 120 mm

Pot compartment

Total dimensions: L 145 x H 280 x D 444 mm

Number of pots: 1

Max. pot size: L 135 x H 205 x D 404 mm

Security and closing of the compartment: electric latch
lockable door
compartment cover detector

Shielding thickness: 40 mm of lead

Lift: electric with 300 mm

Compatible pot models: Curium, AAA, PETNET, Posisafe®, Comecer (other on request)

Dose calibrator compartment

Effective dimensions of the dose calibrator compartment: Ø 220 x H 465 mm

Shielding thickness: 40 mm of lead

Compatible dose calibrator brands: Lemer Pax, Medisystem, Capintec, Veenstra

Bin housings

Number of housings: 2

Effective dimensions of a bin housing: Ø 150 x H 225 mm

2 opening systems available: total with manual handle and partial with magnetic system

Compatible waste container models: Dispo 2L - Septoeco PBS New 2L (AP Medical)

Shielding thickness: 40 mm of lead

Removal of the waste bins: through the work space

Airlock chamber

Inner dimensions: L 319 x D 182 x H 232 mm

Sliding tray: on slide rail - max. load: 10 kg

Effective dimensions of the sliding tray: L 246 x D 150 x H 211 mm

Shielding thickness: 20 mm of lead

Effective dimensions of airlock chamber door shielded window: L 155 x H 195 x Th. 24 mm

Download the product data sheet at lemerpax.com

Options

Articulated shelf
Effective dimensions: L 300 x D 100 mm
Maximum load: 10 kg

Large airlock chamber
Effective dimensions:
L 346 x D 150 x H 211 mm
Inner dimensions: L 419 x D 182 x H 232 mm
Effective dimensions of airlock chamber door shielded window: L 255 x H 195 x Th. 33 mm

Dose calibrator measurement display screen (inside hot cell): 15 inches

Programmer: controls 1 socket

Adapter kit for sterile gloves

Dry contact: information on the machines status

Extraction fan shutdown: yes

Aeraulic

Exhaust air flow rate: 120 m³/h

Extraction filtration: HEPA filter and activated carbon filter

Work surface air quality: Class A

Laminar flow filtration: HEPA filter

Negative pressure inside the hot cell: -180 Pa (+/- 20 %)

Airlock chamber and generator air quality: Class C

Electrical

Supply voltage: 230 V

Maximum absorbed current / Electrical data / Current consumption: 16 A / 2 Poles+G 50 Hz / 3 A

Interior power sockets: 2 sockets (electrical, RJ45 or USB as required)

Installation requirements

Floor load: 5 t/m²

Door passage width: ≥ 90 cm

Diameter required for air extraction from the hot cell: Ø100 mm

Compressed air (service or compressor): 6 bar, 20L/min

Package

Package dimensions: Contact us

Package weight (product without options): Contact us

Ref.: 00025491

* The dimensions must be confirmed by a layout drawing
**Regulations in ASN Guide No.32 "In vivo nuclear medicine facilities: minimum technical rules for design, operation and maintenance"

MEDI **9000 PET** CLASS **A**

SHIELDED HOT CELL FOR PREPARATION AND FRACTIONATING OF RADIOPHARMACEUTICALS

HIGH **ENERGY**

The **Medi 9000 PET shielded hot cell with 2 glove ports** is for manual preparation and designed for **measurement and fractionating of high-energy radiopharmaceuticals** for nuclear medicine **PET and SPECT** activities. With its controlled **Class A (ISO 5) laminar air flow** environment over the entire work surface, it also allows **radiolabelling** to be carried out in **safe** conditions and in **compliance with good practices** preparation and manufacturing practices.

The Medi 9000 PET 2R shielded hot cell is the **most ergonomic high-energy hot cell on the market** with its **large shielded viewing window**, thus offering enhanced **working comfort**, while guaranteeing **maximum radiation protection** when handling the most irradiating radioisotopes such as ^{18}F, ^{131}I, etc.
This **multi-purpose and scalable** hot cell allows for **automatic patient dose collection** with the **"Mediflash" option**, thus contributing to additional exposure reduction for the user.

REGULATORY FRAMEWORK

The Medi 9000 PET 2R hot cell meets the requirements of the **European machinery 2006/42/EC** and electromagnetic compatibility **2004/108/EC** directives.
It makes it possible to meet the requirements of good preparation practices (GPP & GMP) for radiopharmaceutical drugs, subject to the implementation of suitable procedures, jointly with the customer.

In terms of radiation protection, the Medi 9000 PET 2R meets the requirements of the **European Directive 96/29 EURATOM of 29 June 1996**. It guarantees a **dose rate at 5 cm from the walls of less than 25 µSv/h** for the operator.
In order to also meet the requirements of **the order of 16 January 2015 approving Decision No. 2014-DC-0463 of the French Nuclear Safety Authority (ASN)** mainly concerning the ventilation and negative pressure of the shielded hot cell, the Medi 9000 PET 2R can be immediately connected to the ventilation network, independently of the rest of the building, with a 125 mm diameter suction outlet located on the ceiling of the room. It is fitted with an exhaust fan (measurement at the cell outlet 120 m^3/h, 1.7 m/s) located after the filtration system and allows to obtain a 250 Pa negative pressure inside the cell.

The hot cell is fitted with a self-contained ventilation and filtration system composed of a HEPA inlet filtration and aerosol and active carbon outlet filters.

Class A controlled atmosphere zone (GMP criteria) under laminar flow is provided along the entire surface of the work surface by two fans. The generator compartment and the air chambers have an independent air ventilation/filtration system which ensures Class C air quality (GMP criteria). The different air classes in the enclosure are measured in accordance with the ISO 14644 standard.

FOCUS

The work surface combines **comfort and radiation protection** with its **very large shielded viewing window made of laminated lead safety glass** (thickness 130 mm). The organisation of each element and its accesses (pot, dose calibrator, waste bin) have been designed and laid out in order to allow users to carry out any manipulation operation (measurement, fractionating, etc.) in an **ergonomic** and **secure** environment. The **robust construction** of the 316L stainless steel plate construction allows **easy daily maintenance** for radioactive and bacteriological decontamination.

The lo ckable pot compartment with a 50 mm lead shield, for **enhanced security**, is equipped with an **electric lift**, so that the user does not have **to handle heavy loads. It is compatible with all models** of shielded multi-dose radiopharmaceutical vial models with a customised shim system, it can accommodate a pot and transfers the vial directly to the work space using the lift.

The 40 mm lead shielded dose calibrator compartment allows the installation of the measuring device as required for improved versatility. Exposure to the user's hands and fingers is considerably reduced with the **innovating automatic and pneumatic dose calibrator dipper raising and lowering system**, available with the Lemer Pax & Medisystem group dose calibrator references, and the Capintec models.

The waste bin compartment features a 40 mm lead shield. It **facilitates the sorting of contaminated waste** as it can accommodate 2 independent collectors accessible under the work surface. It features a key lock and secures the decay of waste. The work surface features magnetic openings, no need for an inconvenient cover with a handle. **An additional storage space** is available under the shelf supporting the waste collectors, thus allowing: the storage of constancy sources, the decay of any residual content of vials or it even allows the installation of large capacity PIMW collectors.

The shielded lateral airlock chamber with 20 mm lead is equipped with a stainless steel **sliding tray** mounted on a slide rail, **withstanding** loads of up to 10 kg, allowing to insert and remove equipment and patient doses. The airlock chamber inner doors are opened and closed with a manually-operated mechanical system. **Interlocking with the outer doors is available as an option**.

ASSOCIATED PRODUCTS

- Mediflash airlock chamber
- Exposure reduction cover
- Jetti® injection unit
- Manujet injection unit

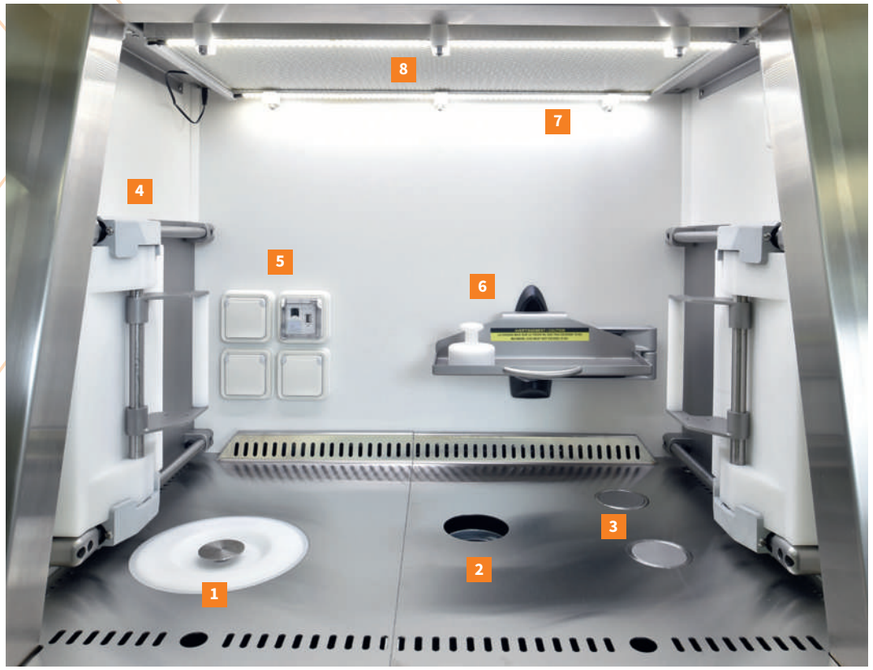

1 | Pot access **2** | Dose calibrator access **3** | 2 bin accesses with magnetic plugs **4** | Airlock chamber inner door with handle for manual opening **5** | Socket emplacements (electrical, USB, RJ45) **6** | Hinged shelf (optional) **7** | LED lighting **8** | HEPA filter **9** | Pot shielded compartment **10** | Automatic dose calibrator dipper raising and lowering system (optional) **11** | Shielded 2-bin compartment with mini storage cabinet for decay underneath. **12** | 2 independent accesses with magnetic opening for waste separation **13** | Mediflash airlock chamber as a second airlock chamber to automate dose collection (optional)

OPTIONS

INTERLOCKING OF AIRLOCK CHAMBER	ensures that the air class in the work space is maintained when equipment is inserted and removed.
MEDIFLASH AIRLOCK CHAMBER	allows for automatic patient dose collection.
PNEUMATIC DIPPER RAISING SYSTEM	reduces exposure to the hands and fingers, requiring the use of only one hand during measurements.
HINGED SHELF	facilitates the storage of the various accessories and consumables used on a daily basis without cluttering the work surface.
SCREEN DISPLAYING DOSE CALIBRATOR MEASUREMENT	positioned in the hot cell, allows for unprecedented working ergonomics for the operator.
OUTLET PROGRAMMER	manages the use of the electrical accessories present on the work surface.

CHARACTERISTICS

General

External dimensions* (1/2 airlock chambers): L 1 511/1 879 x D 1 037 x H 2 018 mm

Hot cell tare weight (1/2 airlock chambers): 4 000/4 200 kg

Exterior finish: Painted steel RAL 9010 + ABS

Interior finish: Corian + 316 L stainless steel

Standard equipment:
- 1 airlock chamber
- 1 shielded compartment - pot
- 1 shielded compartment - dose calibrator
- 1 shielded compartment - 2 waste bins

Type of lighting: Naotek IP65 LED strip

Brightness: > 1 000 Lux

Germicidal UV: 2 x 9W G23 UV bulbs

Noise level: < 60 dB(A)

Shielding thickness: 40 mm of lead

Radiation protection:

Maximum radioactivity that can be handled to obtain a dose rate less than 25 µSv/h at 5 cm from the walls**

Radionuclides	Maximum radioactivity that can be handled
^{18}F	97,9 GBq
^{131}I	71 GBq
^{68}Ga	3,22 GBq
^{177}Lu	$5,55.10^{9}$ TBq

Calculation conditions: sources positioned in a 30 mm lead pot

Work surface

Dim. : L 794 x D 588 x H 581 mm

Effective dimensions: L 792 x D 554 x H 560 mm

Work surface height: 1 068 mm

Work surface finish: 316L stainless steel

Shielding thickness: 40 mm of lead

Number of glove ports: 2

Diameter of the glove ports: Ø 156 mm

Glove port axis height: 1 160 mm

Effective dimensions of the standard lead glass viewing window: L 563 x H 405 x Th. 130 mm

Pot compartment

Total dimensions: L 236 x D 437 x H 560 mm

Number of pots: 1

Max. pot size: L 160 x D 300 x H 460 mm

Security and closing of the compartment: lockable

Shielding thickness: 50 mm of lead

Lift: electrical, stroke 300 mm

Compatible pot models: Curium, AAA, PETNET, Posisafe®, Comecer (other on request)

Dose calibrator compartment

Effective dimensions of the compartment: L 208 x D 437 x H 570 mm

Shielding thickness: 40 mm of lead

Compatible dose calibrator brands: Lemer Pax, Medisystem, Capintec, Veenstra

Bin compartment

Total dimensions: L 160 x D 437 x H 470 mm

Effective dimensions: L 160 x D 424 x H 240 mm

Number of containers: 2

Compatible container models: Dispo 2L - Septoeco PBS New 2L AP Medical

Shielding thickness: 40 mm of lead

Removal of the waste bins: from the front

Airlock chamber

Inner dimensions: L 474 x D 215 x H 230 mm

Sliding tray on slide rail max. load: 10 kg

Effective dimensions of the sliding tray: L 400 x D 130 x H 170 mm

Shielding thickness: 20 mm of lead

Options

Interlocking of airlock chamber doors

Mediflash airlock chamber

Articulated shelf

Dose calibrator measurement display screen (inside hot cell)

Socket programmer

Dry contact

Pneumatic dipper raising system

Aeraulic

Exhaust air flow rate: 120 m^3/h

Extraction filtration: Active carbon filter

Work surface air quality: Class A

Laminar flow filtration: HEPA filter

Negative pressure inside the hot cell: -160 Pa (+/- 20 %)

Airlock chamber and generator air quality: Class C

Extraction fan shutdown

Electrical

Supply voltage: 230 V

Maximum absorbed current / Electrical data / Current consumption: 16 A / 2 Poles+G 50 Hz / 3 A

Interior power sockets: 2 power sockets + 1 RJ 45 / USB socket

Installation requirements

Floor load: 8,2 t/m^2

Door passage width: 90 cm

Diameter required for air extraction from the hot cell: Ø 125 mm

Compressed air (service or compressor): 6 bar, 20 L/min

Package

Package dimensions: Contact us

Package weight (product without options): Contact us

Ref.: 00034074

Download the product data sheet at lemerpax.com

EFFECTIVE DIMENSIONS (mm)

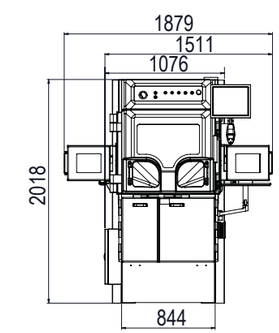

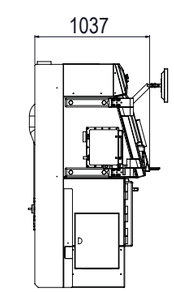

* The dimensions must be confirmed by a layout drawing
**Regulations in ASN Guide No.32 "In vivo nuclear medicine facilities: minimum technical rules for design, operation and maintenance"

OUR VISION FOR DESIGN

The **Easypet** shielded hot cell **combines reliability** and **safety** achieved by the Lemer Pax Research & Development teams in the design of this project. This equipment offers the ideal compromise between **automation** and **conventional manual use**, to **guarantee users 100 % availability** with **multi-purpose** operating modes.

Easypet is an **automatic shielded hot cell** with 2 glove ports designed for **fractionating** and **measurement** of **ready-to-use fluorinated radiopharmaceuticals** such as **^{18}F-FDG, ^{18}F-Choline, ^{18}F-FNa, ^{18}F-Dopa**, etc.

Its **sealed, ventilated and controlled class A (ISO 5) environment**, as well as its **40 mm lead shield**, provide all the properties necessary for handling the **high-energy** radioisotopes commonly used for **PET and SPECT** activities in accordance with good radiopharmacy practices.

It is equipped with 2 dose calibrators, and, if required, can be used as a manual hot cell for measuring **^{131}I** capsules for thyroid therapy, for example.

EASY**PET** CLASS **A**

AUTOMATIC, MULTIPURPOSE HOT CELL FOR FRACTIONATING OF RADIOPHARMACEUTICALS

HIGH **ENERGY**

ASSOCIATED PRODUCTS

- Jetti® injection unit
- Manujet injection unit
- Manujet Shield injection unit

FOCUS

The specially developed, user-friendly and intuitive application guides the user through every step of the process and makes it quick, easy and secure to get started.
The real-time measurement of activity, in the stock solution vial and in the preparation syringe is carried out with the two dedicated dose calibrators.
Adjustment of the dose sampled is possible if necessary, even after preparation.
Dilution of the radiopharmaceutical vial is available at any time during the application, thus optimising the use of the residual volume of stock solution activity.
Interoperability in two-way connection with the service's radiopharmacy software, guarantees perfect traceability of drug lists and patient lists.
Daily quality checks of the dose calibrators are made easy with a dedicated and intuitive programme.
Rinsing the sampling kit before removal significantly reduces exposure to the operator's hands and fingers.
The preparation safety system alerts the user in case of malfunction during patient dose collection and prevents leakage and contamination risks.
Downgraded modes available for: vial transfer into the dose calibrator, dose collection, activity measurement and return of the vial to its transport pot, guarantee 100 % operational availability.
The vial dose calibrator can be calibrated for other radioisotopes. It is supplied with an automatic, pneumatic foot-operated dipper raising system (dipper also supplied).
Remote maintenance allows for secure remote assistance and troublesho o ting by Lemer Pax support teams.

REGULATORY FRAMEWORK

The Easypet hot cell meets the requirements of the **European machinery 2006/42/EC** and electromagnetic compatibility **2004/108/EC** directives.
It enables the requirements of **good preparation practices** (GPP & GMP) for radiopharmaceutical drugs to be met, provided that the customer also implements suitable procedures.

In terms of radiation protection, the Easypet meets the requirements of the **European Directive 96/29 EURATOM of 29 June 1996**. It guarantees a **dose rate at 5 cm from the walls of less than 25 µSv/h** for the operator. In order to also meet the requirements of **the order of 16 January 2015 approving Decision No. 2014-DC-0463 of the French Nuclear Safety Authority (ASN)** mainly concerning the ventilation and negative pressure of the shielded hot cell, the Easypet can be immediately connected to the ventilation network, independently of the rest of the building, with a 100 mm diameter suction outlet located on the ceiling of the room. It is fitted with an exhaust fan (measurement at the cell outlet 120 m^3/h, 1.7 m/s) located after the filtration system and allows to obtain a 250 Pa negative pressure inside the cell.

The hot cell is fitted with a self-contained ventilation and filtration system composed of a HEPA inlet filtration and aerosol and active carbon outlet filters.

Class A controlled atmosphere zone (GMP criteria) under laminar flow is provided along the entire surface of the work surface by two fans. The generator compartment and the air chambers have an independent air ventilation/filtration system which ensures Class C air quality (GMP criteria). The different air classes in the cell are measured in accordance with standard **ISO 14644**.

The work surface is optimised to accommodate the essential elements for dose fractionating. It consists of **two bin accesses** [**1**] for two independent housings with 40 mm lead shields and two opening modes: full and partial, a **pot access** [**2**] with **a pendular vial gripping system** [**3**], a 40 mm lead shielded **vial dose calibrator access** [**4**] equipped with a vial tilter to sample the entire volume of stock solution as well as **a syringe dose calibrator access** [**5**]. It is also equipped with a **peristaltic filling pump** [**6**] for sampling doses, diluting vials, purging and rinsing the kits, as well as **2 socket emplacements** (electric, USB, RJ45 as required) [**7**]. All covers are magnetic in order to preserve a flat working surface as large as possible. **A HEPA filter** [**8**] covers the entire work surface. **Two LED lighting strips** [**9**] are located at the front and rear. **A germicidal UV tube** [**10**] is also present with a programmable timer. Its **robust construction** made of **316L stainless steel plates** [**11**] allows **easy daily maintenance** for radioactive and bacteriological decontamination.

[**12**] **The shielded pot compartment** (40 mm lead) is equipped with a sliding tray and an electric lift. It can accommodate all models of shielded multi-dose radiopharmaceutical vial shields with a system of customised shims (further to study). The pot is loaded behind the shielded door for improved radiation protection. [**13**] The shielded syringe cartridge compartment (40 mm lead) is equipped with a fill detection system and alerts the user in case of malfunction. It is also equipped with an electric latch and an automatic lock in case of potential leakage for enhanced security. [**14**] The syringe cartridge allows the patient dose to be filled into a 10 mL syringe with a 9 mm tungsten shielded syringe shield. A spring system releases the syringe from the tungsten shield to ensure measurement without shield attenuation. [**15**] **The shielded lateral airlock chamber** (20 mm lead) with viewing window is equipped with a **sliding** stainless steel **tray** mounted on a slide rail, **withstanding** loads of up to 10 kg, allowing to insert and remove equipment and accessories. The inner and outer doors are interlocked by a foot-operated pneumatic seal system and timed to ensure and maintain the particulate air class of the work space.

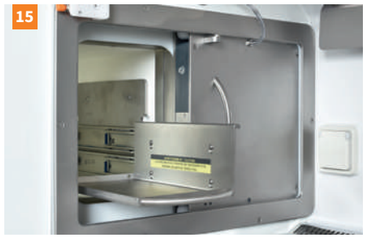

Download
the product data sheet
at lemerpax.com

CONSUMABLES

Sterile syringe kit
Ref. 00008218

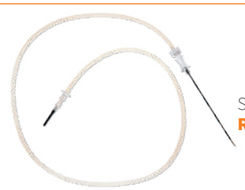

Sterile vial kit
Ref. 00007030

CHARACTERISTICS

HIGH **ENERGY**

General

External dimensions* (1 airlock chamber): L 1 494 x D 832 x H 2 241 mm

Hotcell tare weight (1 airlock chamber): 2 980 kg

Exterior finish: ABS + painted steel

Interior finish: White anti-UV PVC + 316L stainless steel

Standard equipment:
- 1 airlock chamber
- 1 shielded compartment - multidose pot
- 1 shielded syringe cartridge compartment with dose calibrator (cartridge included)
- 1 shielded dose calibrator compartment for vial (dose calibrator included)
- 2 shielded housings - 2 waste bins

Type of lighting: LED

Brightness: > 1 000 Lux

Germicidal UV: 8W UV tube with timer

Noise level: < 65 dB(A)

Shielding thickness: 40 mm of lead
50 mm of lead on the side with the puncturing system

Radiation protection:

Maximum radioactivity that can be handled to obtain a dose rate less than 25 µSv/h at 5 cm from the walls**

Radionuclides	Maximum radioactivity that can be handled
^{18}F	97,9 GBq
^{131}I	71 GBq
^{68}Ga	3,22 GBq
^{177}Lu	$5,55.10^{9}$ TBq

Calculation conditions: sources positioned in a 30 mm lead pot

Work surface

Total dimensions: L 616 x D 576 x H 450 mm

Effective dimensions: L 604 x D 510 x H 428 mm

Work surface height: 1 123 mm

Work surface finish: 316L stainless steel

Shielding thickness: 40 mm of lead

Number of glove ports: 2

Diameter of the glove ports: Ø 156 mm

Glove port axis height: 1 190 mm

Lead glass viewing window: L 297 x H 243 x Th. 120 mm

Front door: secured with electric latch and glove port closing sensor

Vial grip system: automated tilting system with external control and manual crank in downgraded mode

Vial removal system: pneumatically and manually operated system in downgraded mode

Dose filling pump: peristaltic pump with two-way movements

Pot compartment

Total dimensions: L 145 x D 206 x H 280 mm

Max. pot size: Ø 126 x H 200 mm

Compatible pot models: Curium, AAA, PETNET, Posisafe® (other on request)

Security and closing of the compartment: electric latch, lockable and cap presence sensor

Electric lift: 300 mm, sliding tray with position sensor

Shielding thickness: 40 mm of lead

Vial dose calibrator compartment

Effective dimensions: Ø 180 x H 280 mm

Shielding thickness: 40 mm of lead

Dose calibrator brand: Lemer Pax chamber 2/3 (supplied)

Spoon raising system: pneumatic with foot control

Syringe cartridge compartment

Syringe dose calibrator:
Effective dimensions: Ø 172 x H 235 mm
Shielding thickness: 25 mm of lead
Dose calibrator brand: Lemer Pax chamber 2/3 (supplied)

Compartment access door:
Security and closing system: electric latch, lockable
Shielding thickness: 40 mm of lead

Filling detection system: warning in case of malfunction and leakage

Bin housings

Number of housings: 2

Effective dimensions: Ø 163 x H 219 mm

2 opening systems available partial and total with magnetic handle system

Compatible waste container models: Dispo 2L - Septoeco PBS New 2L (AP Medical)

Shielding thickness: 40 mm of lead

Removal of the waste bins: through the work space

Airlock chamber

Inner dimensions: L 319 x D 182 x H 232 mm

Sliding tray on slide rail
max. load: 10 kg

Effective dimensions of the sliding tray: L 246 x D 150 x H 211 mm

Shielding thickness: 20 mm of lead

Effective dimensions of airlock chamber door shielded window: L 155 x H 195 x Th. 24 mm

Door opening systems: pneumatic seals (inner door opening) and interlocking between inner and outer doors

Options

Large airlock chamber

Adapter kit for sterile gloves

Aeraulic

Exhaust air flow rate: 120 m^3/h

Extraction filtration: HEPA filter and activated carbon filter

Work surface air quality: Class A

Laminar flow filtration: HEPA filter

Negative pressure inside the hot cell: -180 Pa (+/- 20 %)

Airlock chamber and pot compartment air quality: Class C

Electrical

Supply voltage: 30 V

Maximum absorbed current / Electrical data / Current consumption: 16 A / 2 Poles+G 50 Hz / 3 A

Interior power sockets: 2 sockets (electrical, RJ45 or USB as required)

Installation requirements

Floor load: 5,3 t/m^2

Door passage width: ≥ 90 cm

Diameter required for air extraction from the hot cell: Ø100 mm

Compressed air (service or compressor): 6 bar, 20L/min

Package

Package dimensions: Contact us

Package weight (product without options): Contact us

Ref.: 00035471

EFFECTIVE DIMENSIONS (mm)

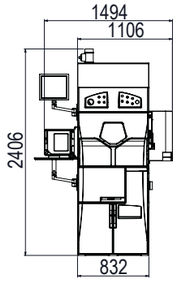

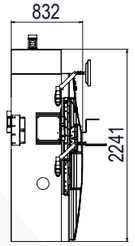

* The dimensions must be confirmed by a layout drawing
**Regulations in ASN Guide No.32 "In vivo nuclear medicine facilities: minimum technical rules for design, operation and maintenance"

MEDI **2000 PET C** CLASS **C**

SHIELDED HOT CELL FOR MANUAL PREPARATION OF RADIOPHARMACEUTICALS

HIGH **ENERGY**

ASSOCIATED PRODUCTS

- Exposure reduction cover
- Easyview HE syringe shields
- Mediclic HE syringe shields
- Medi handling tongs
- Medi HE carrier
- Easybox HE carrier
- Manubox trolley
- Posisafe® container

The **Medi 2000 PET hot cell with 2 glove ports (class C)** is the basic **high-energy** equipment for **manual preparation**. This **ultra-compact** hot cell was developed mainly for the **measurement** and **fractionating of ^{18}F and ^{131}I** labelled **radiopharmaceuticals** for **PET** and **SPECT** activities, with a suitable **40 mm lead** shield.
It was first designed in 2006, and is being upgraded to meet new market needs and is now **also available in Class A (optional)** to allow **safe radiolabelling**.
Its distinctive design and layout with **a shielded, bevelled viewing window** allow for an **ergonomic working position** regardless of the user's size. The materials selected for its white PVC anti-UV interior finish and painted steel exterior provide a **robust and durable hot cell**.

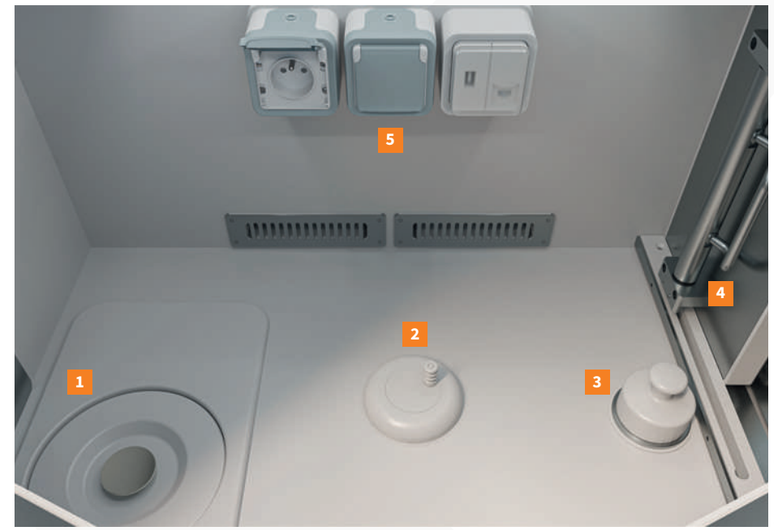

1 | Access to stock solution pot **2** | Dose calibrator sample dip per **3** | Waste bin access with magnetic opening **4** | Airlock chamber internal door with manual mechanical opening **5** | Power sockets (electrical, USB, RJ45) **6** | External access door, left side of the hot cell

REGULATORY FRAMEWORK

The Medi 2000 PET 2R hot cell meets the requirements of the **European machinery 2006/42/EC** and electromagnetic compatibility **2004/108/EC** directives. It makes it possible to meet the requirements of good preparation practices (GPP & GMP) for radiopharmaceutical drugs, subject to the implementation of suitable procedures, jointly with the customer.
In terms of radiation protection, the Medi 2000 PET 2R meets the requirements of the **European Directive 96/29 EURATOM of 29 June 1996**. It guarantees a **dose rate at 5 cm from the walls of less than 25 µSv/h** for the operator.

In order to also meet the requirements of **the order of 16 January 2015 approving Decision No. 2014-DC-0463 of the French Nuclear Safety Authority (ASN)** mainly concerning the ventilation and negative pressure of the shielded hot cell, the Medi 2000 PET 2R can be immediately connected to the ventilation network, independently of the rest of the building, with a 125 mm diameter suction outlet located on the ceiling of the room. It is fitted with an exhaust fan (measurement at the cell outlet 120 m^3/h, 1.7 m/s) located after the filtration system and allows to obtain a 250 Pa negative pressure inside the cell.

The hot cell is fitted with a self-contained ventilation and filtration system composed with inlet HEPA filter and active carbon and HEPA outlet filters.
The air class in the cell is measured in accordance with **standard ISO 14644**. An ISO 7 **Class C** controlled atmosphere zone (GMP criteria) is provided along the work surface **(Class A as an option)**.

FOCUS

[1] **The lockable pot compartment** with a 50 mm lead shield, for **enhanced security**, is equipped with an electric lift, so that the user does not have to handle heavy loads. It is compatible with all models of shielded multi-dose radiopharmaceutical vial shields, with a system of customised shims it can accommodate a pot and the vial is directly available for the user in the work space.

[2] **The dose calibrator compartment** with a 40 mm lead shield is compatible with Capintec, Veenstra, Lemer Pax and Medisystem measuring devices. Exposure to the user's hands and fingers is considerably reduced with the **innovating automatic dose calibrator dipper raising system** available with the Lemer Pax & Medisystem group dose calibrator references.

[3] **The waste bin compartment** features a 40 mm lead shield and is accessible from the front under the work surface. The work surface features a magnetic opening, no need for an inconvenient cover with a handle.

[4] **The lateral airlock chamber** features a 20 mm lead shield and is equipped with a stainless steel **sliding tray** mounted on a slide rail, **withstanding** loads of up to 10 kg, allowing to insert and remove equipment and patient doses. The airlock chamber inner doors are opened and closed with a manually-operated mechanical system.

OPTIONS

PNEUMATIC DIPPER RAISING SYSTEM	with foot-operated control reduces exposure to the hands and fingers, requiring the use of only one hand during measurements.
SECOND AIRLOCK CHAMBER	to optimise and order the inserting and removing of equipment, accessories and patient doses.

CHARACTERISTICS

General

External dimensions* (1 airlock chamber): L 1 282 x D 897 x H 1 663 mm

Hotcell tare weight (1 airlock chamber): 2 810 kg

Exterior finish: Painted steel

Interior finish: White anti-UV PVC

Standard equipment:
- 1 airlock chamber
- 1 shielded compartment - pot with lift
- 1 shielded compartment - dose calibrator
- 1 compartment - 1 bin

Type of lighting: LED

Brightness: > 1 000 Lux

Germicidal UV: 2x8W UV C tubes

Noise level: < 65 dB(A)

Shielding thickness: 40 mm of lead

Radiation protection:

Maximum radioactivity that can be handled to obtain a dose rate less than 25 µSv/h at 5 cm from the walls**

Radionuclides	Maximum radioactivity that can be handled
^{18}F	97,9 GBq
^{131}I	71 GBq
^{68}Ga	3,22 GBq
^{177}Lu	$5{,}55.10^{9}$ TBq

Calculation conditions: sources positioned in a 30 mm lead pot

Work surface

Total dimensions: L 737 x D 559 x H 474 mm

Effective dimensions: L 668 x D 559 x H 412 mm

Work surface height: 1 000 mm

Work surface finish: White anti-UV PVC

Shielding thickness: 40 mm of lead

Number of glove ports: 2

Diameter of the glove ports: Ø 156 mm

Glove port axis height: 1 100 mm

Effective dimensions of the standard lead glass viewing window: L 580 x H 255 x Th. 120 mm

Left side access door: 40 mm lead shield

Download **the product data sheet** at lemerpax.com

Pot compartment

Total dimensions: L 201 x D 437 x H 552 mm

Number of pots: 1

Max. pot size: Ø 152 x H 350 mm

Security and closing of the compartment: lockable door

Shielding thickness: 50 mm of lead

Lift: electric with 300 mm stroke

Compatible pot models: Curium, AAA, PETNET, Posisafe®, Comecer (other on request)

Dose calibrator compartment

Effective dimensions: Ø 210 x H 552 mm

Shielding thickness: 40 mm of lead

Compatible dose calibrator brands: Lemer Pax, Medisystem, Capintec, Veenstra

Bin compartment

Number of bins: 1

Effective dimensions: L 175 x D 437 x H 552 mm

Opening: magnetic tungsten plug

Compatible waste container models: Dispo 2L - Septoeco PBS New 2L (AP Medical) - SharpSafe 7L square

Shielding thickness: 40 mm of lead

Removal of the waste bins: from the front

Airlock chamber

Inner dimensions: L 356 x D 203 x H 250 mm

Sliding tray on slide rail max. load 10 kg

Effective dimensions of the sliding tray: L 270 x D 128 x H 228 mm

Shielding thickness: 20 mm of lead

Options

Pneumatic dipper raising system: compatible with all Lemer Pax and Medisystem dose calibrators

Second airlock chamber

Aeraulic

Exhaust air flow rate: 120 m³/h

Extraction filtration HEPA filter and activated carbon filter

Work surface air quality: Class C

Negative pressure inside the hot cell: -180 Pa (+/- 20 %)

Electrical

Supply voltage: 230 V

Maximum absorbed current / Electrical data / Current consumption: 16 A / 2 Poles+G 50 Hz / 3 A

Interior power sockets: 2 sockets (electrical, RJ45 or USB as required)

Installation requirements

Floor load: 5,8 t/m²

Door passage width: ≥ 90 cm

Diameter required for air extraction from the hot cell: Ø 100 mm

Compressed air (service or compressor): 6 bar, 20 L/min

Package

Package dimensions: Contact us

Package weight (product without options): Contact us

Ref.: 00038188

EFFECTIVE DIMENSIONS (mm)

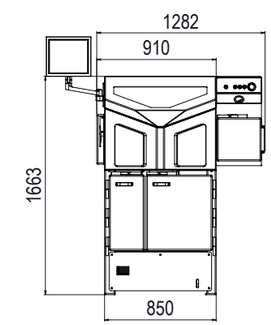

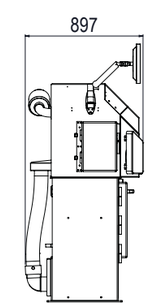

* The dimensions must be confirmed by a layout drawing
**Regulations in ASN Guide No.32 "In vivo nuclear medicine facilities: minimum technical rules for design, operation and maintenance"

EASY**PHARMA Ga/Ge** CLASS **A**

SHIELDED HOT CELL FOR THE SYNTHESIS OF RADIOPHARMACEUTICALS

HIGH **ENERGY**

PET

ASSOCIATED PRODUCTS

- Mediclic HE syringe shield
- Exposure reduction cover
- Medi HE carrier
- Crocobox HE carrier
- Manubox trolley

The **Easypharma Ga/Ge** manual shielded hot cell with **2 glove ports**, is designed for **radiolabelling** and **fractionating** of radiopharmaceuticals mainly labelled with **Gallium-68** for **PET** activity. It allows the elution of the Germanium generator as well as radiosynthesis operations with modules adapted to the work space if necessary. Its **compact** design, hides its **versatility**, since it also allows **fractionating of ready-to-use radiopharmaceuticals** such as **^{18}F-FDG** or any other fluorinated drug with its optimised architecture integrating a dedicated and secure space, equipped with a shielded pot lift.
It provides the operators with daily biological protection adapted to their needs, consisting of **40 mm lead screens** and **120 mm lead glass**. The integrity of the preparations is guaranteed by a Class A (ISO 5) laminar air flow over the entire work space.

REGULATORY FRAMEWORK

The Easypharma Ga/Ge hot cell meets the requirements of the **European machinery 2006/42/EC** and electromagnetic compatibility **2004/108/EC** directives.
It makes it possible to meet the requirements of good preparation practices (GPP & GMP) for radiopharmaceutical drugs, subject to the implementation of suitable procedures, jointly with the customer.

In terms of radiation protection, the Easypharma Ga/Ge meets the requirements of the **European Directive 96/29 EURATOM of 29 June 1996**. It guarantees a **dose rate at 5 cm from the walls of less than 25 µSv/h** for the operator.

In order to also meet the requirements of **the order of 16 January 2015 approving Decision No. 2014-DC-0463 of the French Nuclear Safety Authority (ASN)** mainly concerning the ventilation and negative pressure of the shielded hot cell, the Easypharma Ga/Ge can be immediately connected to the ventilation network, independently of the rest of the building, with a 100 mm diameter suction outlet located on the ceiling of the room. It is fitted with an exhaust fan (measurement at the cell outlet 120 m^3/h, 1.7 m/s) located after the filtration system and allows to obtain a 250 Pa negative pressure inside the cell.

The hot cell is fitted with a self-contained ventilation and filtration system composed of a HEPA inlet filtration and aerosol and active carbon outlet filters.

Class A controlled atmosphere zone (GMP criteria) under laminar flow is provided along the entire surface of the work surface by 2 fans. The generator/pot compartment and the airlock chambers feature an air ventilation/filtration system independent from that of the work surface ensuring the Class C air quality (GMP criteria). The different air classes in the enclosure are measured in accordance with the ISO 14644 standard.

FOCUS

The 316L stainless steel **work surface** with a special acid-resistant coating is easily decontaminated and provides the minimum space required to perform **routine Gallium-68** operations and **^{18}F-FDG backups**. It is equipped with 3 independent accesses: one for the dose calibrator, one for the waste bin and one for the pot lift; and with two cable conenctors giving acess to the Germanium generator located in the shielded housing below. Electrical, USB or RJ45 sockets are available as well as LED lighting above the work surface, around the periphery of the filter, and two UV germicidal tubes with timers, on either side.

The 40 mm lead shielded dose calibrator compartment allows the installation of the **measuring device** required for enhanced **versatility**. The **optional "Posilift"** automatic dipper raising system allows to **reduce operator exposure** and provides **unparalleled freedom of movement**, access to the dose calibrator chamber and **improved ergonomics**.

The lockable generator/pot compartment with a 40 mm lead shield, for improved **security**, allows both the positioning of the Germanium generator and is equipped with an **electric lift compatible** with **several shielded carrier pots** for multi-dose vials of radiopharmaceuticals.

The waste compartment with a 40 mm lead shield, is accessible from the work surface and guarantees protection, even in the event of decay of a vial with residual activity. **Partial opening of the magnetic cap significantly reduces exposure to** the hands and fingers during handling operations in the work space.

The lateral airlock chambers with a 20 mm lead shield, and viewing window, are each equipped with a robust stainless steel **sliding tray**, to remove and insert equipment and patient doses. For improved **security**, the inner and outer door openings are **interlocked** with foot-operated control for the inner door.

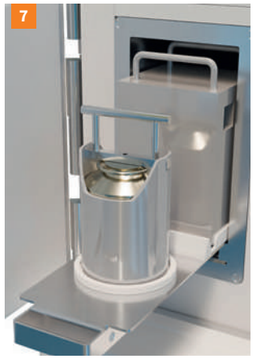

1 | Pot access **2** | 2 cable connectors for generator access **3** | Access to the dose calibrator dipper **4** | Bin access with double magnetic opening **5** | Sliding transfer tray **6** | 2 socket emplacements (electrical, USB, RJ45) **7** | Shielded compartment with double slot sliding trays: 1 for the generator and 1 for the radiopharmaceutical transport pot that fits on the lift.

EFFECTIVE DIMENSIONS (mm)

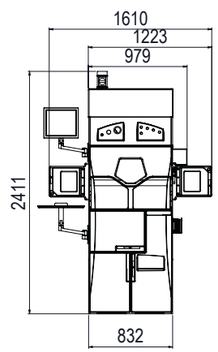

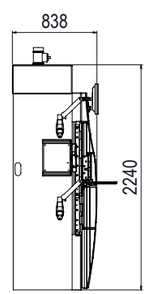

OPTIONS

Download the product data sheet at lemerpax.com

HINGED SHELF	facilitates the storage of the various accessories and consumables used on a daily basis without cluttering the work surface.
LARGE AIRLOCK CHAMBER WITH WINDOW	allows to accommodate the shielded carriers and accessories or sources in transit to be checked.
SCREEN DISPLAYING DOSE CALIBRATOR MEASUREMENT	positioned in the hot cell, allows for unprecedented working ergonomics for the operator.
OUTLET PROGRAMMER	allowing to manage the use of the electrical accessories present on the work surface.
ADAPTOR KIT FOR STERILE GLOVES	ensures optimum hygiene in the work space.
POSILIFT PNEUMATIC DIPPER RAISING SYSTEM	reduces exposure to the hands and fingers, requiring the use of only one hand during measurements.

CHARACTERISTICS

HIGH **ENERGY**

General

External dimensions* (1/2 airlock chambers): L 1 223/1 610 x D 838 x H 2 240 mm

Hot cell tare weight (1/2 airlock chamber): 2 890/2 990 kg

Exterior finish: ABS

Interior finish: PVC

Standard equipment:
- 1 airlock chamber
- 1 shielded compartment for generator and pot with lift
- 1 shielded compartment - dose calibrator
- 1 shielded compartment - 1 waste bin
- shielded cable chicane (max. 9 passages)

Type of lighting: LED

Brightness: > 1 000 Lux

Germicidal UV: 1 UV C 8W tube with timer

Noise level: < 63 dB(A)

Shielding thickness: 40 mm of lead

Radiation protection:

Maximum radioactivity that can be handled to obtain a dose rate less than 25 µSv/h at 5 cm from the walls**

Radionuclides	Maximum radioactivity that can be handled
^{18}F	97,9 GBq
^{131}I	71 GBq
^{68}Ga	3,22 GBq
^{177}Lu	5,55.10^{9} TBq

Calculation conditions: sources positioned in a 30 mm lead pot

Work surface

Total dimensions: L 616 x D 574 x H 453 mm

Effective dimensions: L 610 x D 517 x H 440 mm

Work surface height: 1 124 mm

Work surface finish: Stainless steel 316 L

Shielding thickness: 40 mm of lead

Number of glove ports: 2

Diameter of the glove ports: Ø 156 mm

Glove port axis height: 1 200 mm

Effective dimensions of the standard lead glass viewing window: L 297 x H 243 x Th. 120 mm

Generator + pot compartment

Total dimensions of the compartment: L 145 x H 280 x D 444 mm

Maximum generator size: L 140 x H 230 x D 140 mm

Number of generators: 1

Compatible generator models: GalliaPharm and IGG100 (Eckert& Ziegler) ITG (RadioMedix)

Max. pot size: L 135 x H 227 x D 404 mm

Number of pots: 1

Compatible pot models: Curium, AAA, PETNET, Posisafe®, Comecer (other on request)

Security and closing of the compartment:
- electric strike
- lockable door
- compartment cover detector
- tray position detector

Lift for pot only: electric with 300 mm range

2 capillary passages to the work surface: Ø17 mm

Shielding thickness: 40 mm of lead

Dose calibrator compartment

Effective dimensions: Ø 220 x H 455 mm

Shielding thickness: 40 mm of lead

Dose calibrator brands: Lemer Pax, Medisystem, Capintec, Veenstra

Bin housing

Number of housings: 1

Effective dimensions: Ø 150 x H 225 mm

2 opening systems available: total and partial with magnetic system

Compatible waste container models: Dispo 2L - Septoeco PBS New 2L (AP Medical)

Shielding thickness: 40 mm of lead

Removal of the waste bins: through the work space

Airlock chamber

Inner dimensions: L 319 x D 182 x H 232 mm

Sliding tray on slide rail max. load 10 kg

Effective dimensions of the sliding tray: L 246 x D 150 x H 211 mm

Shielding thickness: 20 mm of lead

Effective dimensions of airlock chamber door shielded window: L 155 x H 195 x Th.24 mm

Options

Articulated shelf
Effective dimensions: L 300 x D 100 mm
Maximum load: 10 kg

Large airlock chamber
Effective dimensions: L 346 x D 150 x H 211 mm
Inner dimensions: L 419 x D 182 x H 232 mm
Effective dimensions of airlock chamber door shielded window: L 255 x H 195 x Th. 33 mm

Dose calibrator measurement display screen (inside hot cell): 15 inches

Programmer: controls 1 socket

Adapter kit for sterile gloves

Dry contact: information on the machines status

Extraction fan shutdown: yes

Aeraulic

Exhaust air flow rate: 120 m^3/h

Extraction filtration: HEPA filter and active carbon filter

Work surface air quality: Class A

Laminar flow filtration: HEPA filter

Negative pressure inside the hot cell: -180 Pa (+/- 20 %)

Airlock chamber and generator air quality: Class C

Electrical

Supply voltage: 230 V

Maximum absorbed current / Electrical data / Current consumption: 16 A / 2 Poles+G 50 Hz / 3 A

Interior power sockets: 2 sockets (electrical, RJ45 or USB as required)

Installation requirements

Floor load: 5,2 t/m^2

Door passage width: ≥ 90 cm

Diameter required for air extraction from the hot cell: Ø100 mm

Compressed air (service or compressor): 6 bar, 20L/min

Package

Package dimensions: Contact us

Package weight (product without options): Contact us

Ref.: 00018324

* The dimensions must be confirmed by a layout drawing
**Regulations in ASN Guide No.32 "In vivo nuclear medicine facilities: minimum technical rules for design, operation and maintenance"

OUR VISION FOR DESIGN

Safety, ergonomics and **versatility** were the key words for our design teams, for the development of the **Medi 9000 Research 2R** shielded hot cell. With **optimum shielding** and **extra-large work space dimensions**, the use of **^{68}Ga** as a radioisotope in **PET** activity was **facilitated**. Medi 9000 Research 2R features **numerous options**, and is the **reference equipment** in **nuclear medicine** services, **adapting to all use constraints.**
Major asset: it also allows **fractionating of** fluorinated radiopharmaceuticals,

MEDI 9000 RESEARCH 2R

CLASS **A**

SHIELDED HOT CELL FOR PREPARATION AND FRACTIONATING OF RADIOPHARMACEUTICALS

HIGH **ENERGY**

PET

ASSOCIATED PRODUCTS

- Mediflash airlock chamber
- Medi handling tongs
- Mediclic HE syringe shield
- Manujet injection unit

The **Medi 9000 Research** shielded hot cell is a hot cell **with 2 glove ports**, for **the preparation of high energy** radiopharmaceuticals, mainly for **PET** activity. This hot cell model is specially designed to carry out **radiolabelling** and **fractionating of Gallium-68** labelled drugs, with a **very spacious work surface**, allowing the integration of **all the modules** on the market, even the bulkiest modules for carrying out **radiosynthesis**. Thus, all the uses, preparations and manipulations necessary for the activity of ^{68}Ga are made possible in this shielded hot cell with **particulate Class A (ISO 5) laminar flow** on the acid-resistant work surface.

Biological protection is provided by **50 mm lead shields** and **160 mm lead glass**, thus ensuring that the user is **adequately protected** during daily activities.

REGULATORY FRAMEWORK

The Medi 9000 Research 2R hot cell meets the requirements of the **European machinery 2006/42/EC** and electromagnetic compatibility **2004/108/EC** directives.
It makes it possible to meet the requirements of good preparation practices (GPP & GMP) for radiopharmaceutical drugs, subject to the implementation of suitable procedures, jointly with the customer.
In terms of radiation protection, the Medi 9000 Research 2R meets the requirements of the **European Directive 96/29 EURATOM of 29 June 1996**. It guarantees a **dose rate at 5 cm from the walls of less than 25 µSv/h** for the operator.
In order to also meet the requirements of **the order of 16 January 2015 approving Decision No. 2014-DC-0463 of the French Nuclear Safety Authority (ASN)** mainly concerning the ventilation and negative pressure of the shielded hot cell, the Medi 9000 Research 2R can be immediately connected to the ventilation network, independently of the rest of the building, with a 100 mm diameter suction outlet located on the ceiling of the room. It is fitted with an exhaust fan (measurement at the cell outlet 120 m^3/h, 1.7 m/s) located after the filtration system and allows to obtain a 250 Pa negative pressure inside the cell.
The hot cell is fitted with a self-contained ventilation and filtration system composed of a HEPA inlet filtration and aerosol and active carbon outlet filters.
Class A controlled atmosphere zone (GMP criteria) under laminar flow is provided along the entire surface of the work surface by 2 fans. The shielded generator/pot compartment and the air chambers feature an independent air ventilation/filtration system ensuring the Class C air quality (GMP criteria). The different air classes in the enclosure are measured in accordance with the ISO 14644 standard.

FOCUS

The work surface depth is extended for the installation of the bulkiest synthesis modules (sliding tray possible) but also the accommodation of a Germanium generator when necessary. It is made of **316L stainless steel**, allowing for **easy decontamination** and features **2 germicidal UV lamps with a timer**. The large, shielded, laminated lead glass window allows **full visibility** and **monitoring of the work space** and any automatic operations that may be taking place. **LED** lighting covers the entire work space. A choice of **electrical, USB or RJ45 sockets** are available as well as **2 capillary passages** to connect to the generator (if positioned in the lower housing). Two wall penetrations are also provided for the external connection of PLCs, if required.

The 50 mm lead shielded dose calibrator compartment allows the installation of the **measuring device** as required for improved **versatility**. The automatic dipper raising system option allows to **reduce operator exposure** and provides **unparalleled freedom of movement**.

The 50 mm lead shielded lockable **generator compartment**, for enhanced **security**, is equipped with a **sliding tray** for easy positioning of the Germanium generator regardless of model and supplier.

The waste compartment allows to accommodate **two waste bins:** one for solid waste and one for liquid waste, with independent accesses on the work surface, each equipped with magnetic openings in order to preserve maximum floor space. Containers are removed from under the work surface through a 50 mm, lead-lined, lockable door.

The lateral airlock chambers with a 30 mm lead shield, are each equipped with a robust stainless steel **sliding tray**, to insert and remove equipment and accessories.

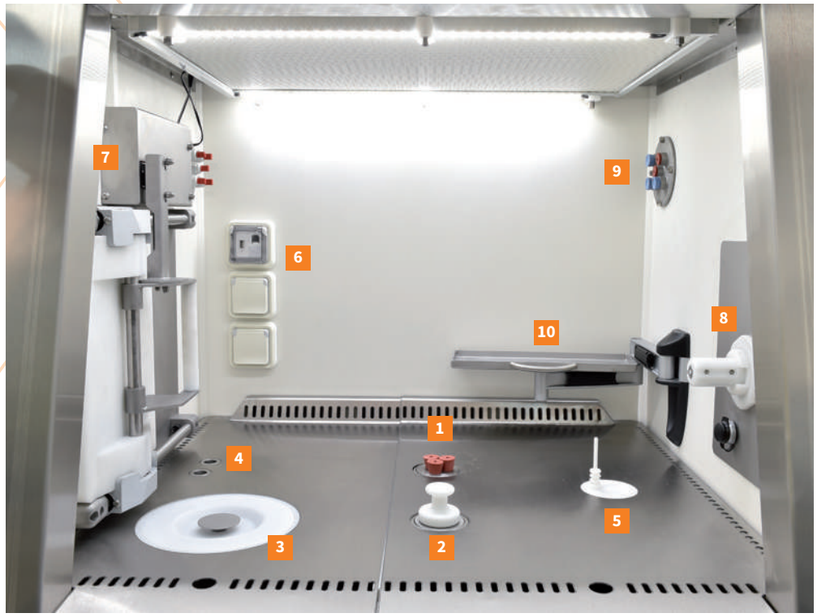

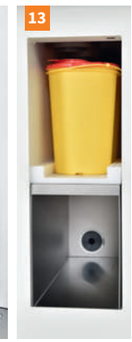

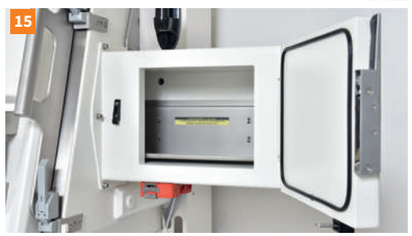

1 | 1 liquid waste bin **2** | 1 solid waste bin **3** | 1 pot lift access **4** | Generator connections **5** | 1 access for dose calibrator **6** | Socket emplacements (electrical, USB, RJ45) **7** | Airlock chamber door electrical interlocking **8** | Mediflash airlock chamber connection **9** | Shielded cable chicane **10** | Accessory shelf **11** | Pot compartment **12** | Pneumatic dipper raising system **13** | Waste bin compartment with front opening **14** | Mediflash airlock chamber **15** | Optional large shielded lateral airlock chamber **16** | Lead glass shielded window

Download the product data sheet at lemerpax.com

OPTIONS

AUXILIARY GENERATOR CABINET	for positioning a second generator.
INTERLOCKING OF AIRLOCK CHAMBER DOORS	by an electric latch to preserve the air class on the work surface.
MEDIFLASH AIRLOCK CHAMBER	allows the automatic preparation of patient doses.
POT COMPARTMENT	with electric lift in place of the generator cabinet, in addition to the “auxiliary generator cabinet” option.
HINGED SHELF	facilitates the storage of the various accessories and consumables used on a daily basis without cluttering the work surface.
ARTICULATED TRAY	for synthesis module.
SCREEN DISPLAYING DOSE CALIBRATOR MEASUREMENT	positioned in the hot cell, allows for unprecedented working ergonomics for the operator.
OUTLET PROGRAMMER	allowing to manage the use of the electrical accessories present on the work surface.
PNEUMATIC DIPPER RINSING SYSTEM	for dose calibrators, allows to reduce exposure of the hands and fingers, requiring the use of only one hand during measurements.
ELECTRIC LOCK	for generator compartment door.

CHARACTERISTICS

General

External dimensions* (1/2 airlock chambers): L 1 554/1 879 x D 1 207 x H 2 018 mm

Hot cell tare weight (1/2 airlock chamber): 5 060/5 280 kg

Exterior finish: Painted steel RAL 9010 + ABS

Interior finish: Corian® + 316L stainless steel

Standard equipment:
- 1 airlock chamber
- 1 shielded compartment - generator
- 1 shielded compartment - dose calibrator
- 2 shielded wall penetrations towards the outside (5 passages each)
- 1 shielded compartment - 2 bins (1 liquid and 1 solid)

Type of lighting: LED

Brightness: > 1 000 Lux

Germicidal UV: 2 x 9W G23 lamps

Noise level: < 63 dB(A)

Shielding thickness: 50 mm de plomb

Radiation protection:

Maximum radioactivity that can be handled to obtain a dose rate less than 25 µSv/h at 5 cm from the walls**

Radionuclides	Maximum radioactivity that can be handled
^{18}F	594 GBq
^{131}I	279 GBq
^{68}Ga	7,42 GBq
^{177}Lu	$2,73.10^{10}$ TBq

Calculation conditions: sources positioned in a 30 mm lead pot

EFFECTIVE DIMENSIONS (mm)

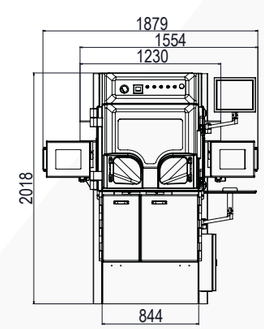

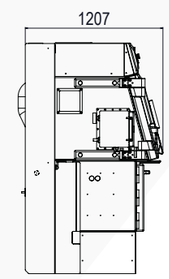

Work surface

Total dimensions: L 794 x D 735 x H 577 mm

Effective dimensions: L 790 x D 700 x H 570 mm

Work surface height: 1 068 mm

Work surface finish: 316L stainless steel

Shielding thickness: 50 mm of lead

Number of glove ports: 2

Diameter of the glove ports: Ø 156 mm

Glove port axis height: 1 165 mm

Lead glass viewing window: Effective dimensions of the lead glass viewing window: L 563 x H 405 x Th.160 mm

Generator compartment

Total dimensions of the compartment: L 236 x H 563 x D 437 mm

Maximum generator size: L 220 x H 390 x D 425 mm

Number of generators: 1

Compatible generator models: Galli Eo (IRE) GalliaPharm and IGG100 (Eckert& Ziegler) ITG (RadioMedix)

Security and closing of the compartment: lockable door

2 capillary passages to the work surface: Ø 18 mm

Shielding thickness: 50 mm of lead

Dose calibrator compartment

Effective dimensions: L 211 x H 560 x D 437 mm

Shielding thickness: 50 mm of lead

Dose calibrator brands: Lemer Pax, Medisystem, Capintec, Veenstra

Bin compartment

Effective dimensions: L 154 x H 461 x D 437 mm

2 waste bins: front - 1 solid waste bin rear - 1 liquid waste bin with 3 capillaries

Compatible waste container models: Dispo 2L - Septoeco PBS New 2L (AP Medical)

Shielding thickness: 50 mm of lead

Removal of the waste bins: Removal of the bins from the front under the work surface

Airlock chamber

Inner dimensions: L 470 x H 232 x D 172 mm

Sliding tray on slide rail max. load 10 kg

Effective dimensions of the sliding tray: L 406 x H 219 x D 134 mm

Shielding thickness: 30 mm of lead

Options

Auxiliary generator cabinet: Effective inner dimensions: L 236 x H 320 x D 300 mm Pull-out tray on rail Shielding: 50 mm of lead 2 capillary passages

Interlocking of airlock chamber doors: by electric latch

Mediflash airlock chamber

Pot compartment with electric lift: as a replacement for the generator cabinet

Articulated shelf: Effective dimensions: L 300 x D 100 mm Maximum load: 10 kg

Articulated tray for synthesis module: Compatible with Mini AIO and EASYONE (Trasis) - FASTlab2 ™ (GE)

Dose calibrator measurement display screen: Positioned inside the 15-inch hot cell

Programmer: Controls 1 socket

Dry contact: information on the machines status

Pneumatic dipper raising system: Compatible with all Lemer Pax and Medisystem dose calibrators

Electric lock for generator compartment door

Aeraulic

Exhaust air flow rate: 120 m^3/h

Extraction filtration: Active carbon filter

Work surface air quality: Class A

Laminar flow filtration: HEPA filter

Negative pressure inside the hot cell: -180 Pa (+/- 20 %)

Airlock chamber and generator air quality: Class C

Extraction fan shutdown: Yes

Electrical

Supply voltage: 230 V

Maximum absorbed current / Electrical data / Current consumption: 16 A / 2 Poles+G 50 Hz / 3 A

Interior power sockets: 4 sockets (electrical, RJ45 or USB as required)

Installation requirements

Floor load: 8,8 t/m^2

Door passage width: 1 190 mm without disassembly 835 mm disassembled

Diameter required for air extraction from the hot cell: Ø 125 mm

Compressed air (service or compressor): 6 bar, 20L/min

Package

Package dimensions: Contact us

Package weight (product without options): Contact us

Ref.: 00034072

* The dimensions must be confirmed by a layout drawing
**Regulations in ASN Guide No.32 “In vivo nuclear medicine facilities: minimum technical rules for design, operation and maintenance”

MEDI 9000
RESEARCH 4R

CLASS **A**

SHIELDED HOT CELL FOR PREPARATION AND FRACTIONATING OF RADIOPHARMACEUTICALS

HIGH **ENERGY**

PET

ASSOCIATED PRODUCTS

- Medi handling tongs
- Exposure reduction cover
- Mediclic HE syringe shield
- Mediflash airlock chamber
- Manujet injection unit
- Jetti® injection unit

The **Medi 9000 Research** shielded hot cell **with 4 glove ports** is for **the preparation of high energy** radiopharmaceuticals, mainly for **PET** activity. Designed for **radiolabelling** and **fractionating of Gallium-68** labelled drugs, this hot cell model allows the integration of **all synthesis modules** on the market, even the bulkiest modules. It is equipped with **two extra wide viewing windows** made of **laminated lead glass**, and provides **full visibility of the work space** in **complete safety** for the operator and **improved monitoring of** manual and automatic operations taking place in the work space.

This **spacious** hot cell, features **two workstations** and offers the possibility of **fractionating ready-to-use ^{18}F-labelled** radiopharmaceuticals in very comfortable conditions, particularly with the **Mediflash** option.
Thus, all the applications and manipulations necessary for **^{68}Ga** and **^{18}F** activities are made possible in this shielded hot cell with **laminar flow** and **particulate class A (ISO 5)** in the work space.
Biological protection is provided by **50 mm lead shields** and **160 mm lead glass**, thus providing the user with **adapted and secure protection** during daily activities.

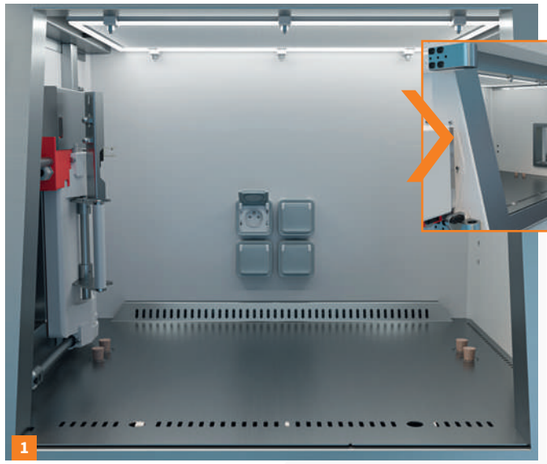

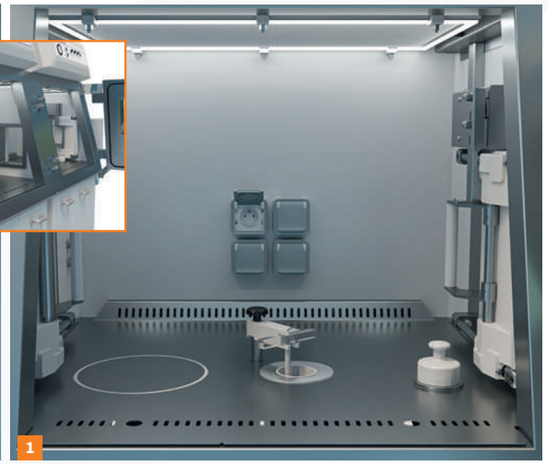

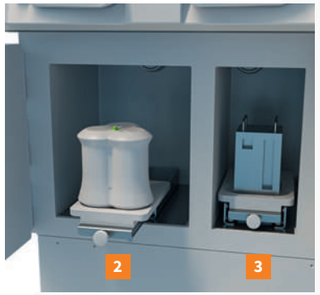

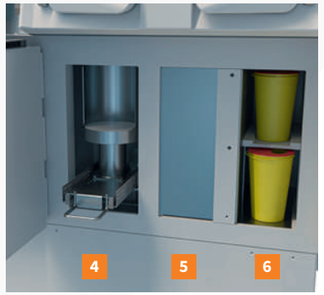

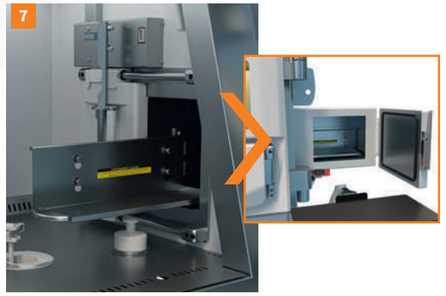

FOCUS

[1] **The extra-large work surface (L 1 721 x H 579 x D 703 mm)** allows the installation of all the synthesis modules (sliding tray optional), and can also accommodate the Germanium generator when required. It is acid resistant, **easily decontaminated** and features **2 germicidal UV lamps with a timer. LED** lighting covers the entire work space. A choice of electrical, USB or RJ45 sockets are available as well as 2 capillary passages to connect to the generator (if positioned in the lower housing). Two shielded cable chicanes, with 5 passages each, are also provided for the external connection (electrical and fluid networks) of PLCs, if required.

[2] **The lockable generator compartment** (50 mm lead shield), for enhanced **security**, is equipped with a **sliding tray** for easy positioning of the **Germanium generator for all models** and suppliers.

[3] **The shielded storage compartment** (50 mm lead) is prepared to receive the constancy sources for the quality control of the dose calibrator or any other radioactive sources requiring transitory storage or decay. This storage cabinet can also be optionally converted into a second generator compartment, a second pot compartment or a front air chamber with a lift.
[4] **The pot compartment**, 50 mm lead, is equipped with an **electric lift** with a sliding tray. It can accommodate all **^{18}F** labelled multidose radiopharmaceutical vial shields, and is secured with a key lock.

[5] **The 50 mm lead shielded dose calibrator compartment** allows the installation of a **measuring device** as required for improved **versatility**. The automatic dipper raising system option allows to **reduce operator exposure** and provides **unparalleled freedom of movement**.

[6] **The waste compartment** allows to accommodate **two waste bins:** with independent accesses on the work surface, each equipped with magnetic openings in order to preserve maximum floor space. Containers are removed from under the work surface through a 50 mm lead-lined, lockable door.

[7] **The lateral airlock chambers** with a 30 mm lead shield, are each equipped with a **robust stainless steel sliding tray**, to insert and remove equipment and accessories.

REGULATORY FRAMEWORK

The Medi 9000 Research 4R hot cell meets the requirements of the **European machinery 2006/42/EC** and electromagnetic compatibility **2004/108/EC** directives.
It makes it possible to meet the requirements of good preparation practices (GPP & GMP) for radiopharmaceutical drugs, subject to the implementation of suitable procedures, jointly with the customer.
In terms of radiation protection, the Medi 9000 Research 4R meets the requirements of the **European Directive 96/29 EURATOM of 29 June 1996**. It guarantees a **dose rate at 5 cm from the walls of less than 25 µSv/h** for the operator.

In order to also meet the requirements of **the order of 16 January 2015 approving Decision No. 2014-DC-0463 of the French Nuclear Safety Authority (ASN)** mainly concerning the ventilation and negative pressure of the shielded hot cell, the Medi 9000 Research 4R can be immediately connected to the ventilation network, independently of the rest of the building, with a 100 mm diameter suction outlet located on the ceiling of the room. It is fitted with an exhaust fan (measurement at the cell outlet 120 m^3/h, 1.7 m/s) located after the filtration system and allows to obtain a 250 Pa negative pressure inside the cell.

The hot cell is fitted with a self-contained ventilation and filtration system composed of a HEPA inlet filtration and aerosol and active carbon outlet filters.
Class A controlled atmosphere zone (GMP criteria) under laminar flow is provided along the entire length of the work surface by 2 fans. The generator/pot compartment and the airlock chambers feature an independent air ventilation/filtration system ensuring the Class C air quality (GMP criteria). The different air classes in the enclosure are measured in accordance with the ISO 14644 standard.

OPTIONS

SEPARATION PARTITION	with 40 mm lead shield between the two work spaces, leaktight, sliding partition with independent ventilation system.
SECOND GENERATOR	as a replacement for the storage cabinet.
FRONT AIRLOCK CHAMBER	as a replacement for the storage cabinet.
SECOND POT COMPARTMENT	as a replacement for the storage cabinet.
INTERLOCKING OF AIRLOCK CHAMBER DOORS	by an electric latch to preserve the air class on the work surface.
MEDIFLASH AIRLOCK CHAMBER	allows automatic preparation of patient doses.
HINGED SHELF	facilitates the storage of the various accessories and consumables used during daily activities without cluttering the work surface.
ARTICULATED TRAY	for synthesis module.
SCREEN DISPLAYING DOSE CALIBRATOR MEASUREMENT	positioned in the hot cell, allows for unprecedented working ergonomics for the operator.
OUTLET PROGRAMMER	allowing to manage the use of the electrical accessories present on the work surface.
THE POSILIFT AUTOMATIC DIPPER RAISING SYSTEM	reduces exposure to the hands and fingers, requiring the use of only one hand during measurements.
ELECTRIC LOCK	for generator compartment door.

EFFECTIVE DIMENSIONS (mm)

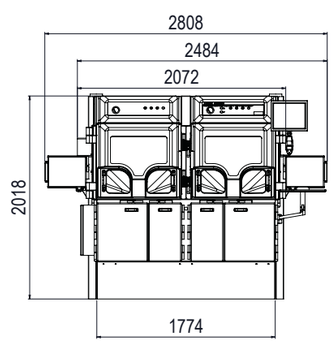

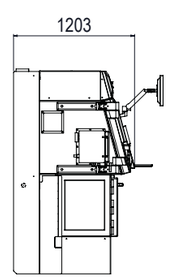

CHARACTERISTICS

HIGH **ENERGY**

General

External dimensions* (1/2 airlock chambers): L 2 484/2 808 x H 2 018 x D 1 203 mm

Hot cell tare weight (1/2 airlock chamber): 8 320 kg/8 520 kg

Exterior finish: Painted steel RAL 901 + ABS

Interior finish: Corian® + 316L stainless steel

Standard equipment:
- 1 airlock chamber
- 1 shielded compartment - generator
- 1 shielded compartment - pot with lift
- 1 shielded compartment - dose calibrator
- 1 shielded compartment - 2 waste bins
- 1 shielded compartment - storage
- 2 shielded wall penetrations towards the outside (5 passages each)

Type of lighting: LED

Brightness: > 1 000 Lux

Germicidal UV: 2 x 9W G23 lamps

Noise level: < 63 dB(A)

Shielding thickness: 50 mm of lead

Radiation protection:

Maximum radioactivity that can be handled to obtain a dose rate less than 25 µSv/h at 5 cm from the walls**

Radionuclides	Maximum radioactivity that can be handled
^{18}F	594 GBq
^{131}I	279 GBq
^{68}Ga	7,42 GBq
^{177}Lu	2,73.10^{10} TBq

Calculation conditions: sources positioned in a 30 mm lead pot

Work surface

Total dimensions: L 1 724 x H 579 x D 738 mm

Effective dimensions: L 1 721 x H 579 x D 703 mm

Work surface height: 1 068 mm

Work surface finish: 316L stainless steel

Shielding thickness: 50 mm of lead

Number of glove ports: 4

Diameter of the glove ports: 156 mm

Glove port axis height: 1 165 mm

2 lead glass viewing windows: L 563 x H 405 x Th. 160 mm each

Download **the product data sheet** at lemerpax.com

* The dimensions must be confirmed by a layout drawing
**Regulations in ASN Guide No.32 "In vivo nuclear medicine facilities: minimum technical rules for design, operation and maintenance"

Generator compartment

Internal dimensions of the hot cell: L 311 x H 563 x D 437 mm

Maximum generator size: L 220 x H 392 x D 383 mm

Number of generators: 1

Security and closing of the compartment: lockable door

2 capillary passages to the work surface: Ø 18 mm

Shielding thickness: 50 mm of lead

Compatible generator models:
Galli Eo (IRE)
GalliaPharm and IGG100 (Eckert& Ziegler)
ITG (RadioMedix)

Pot compartment

Total dimensions: L 413 x H 563 x D 437 mm

Number of pots: 1

Max. pot size: L 150 x H 350 x D 340 mm

Security and closing of the compartment: lockable door

Shielding thickness: 50 mm of lead

Lift with sliding tray: electric with 300 mm stroke

Compatible pot models: Curium, AAA, PETNET, Posisafe®, Comecer (other on request)

Dose calibrator compartment

Effective dimensions: L 189 x H 563 x D 437 mm

Shielding thickness: 50 mm of lead

Dose calibrator brands: Lemer Pax, Medisystem, Capintec, Veenstra

Waste bin compartment

Effective dimensions: L 171 x H 474 x D 437 mm

Number of bins: 2

Shielding thickness: 50 mm of lead

Removal of the waste bins: Removal of the bins from the front under the work surface

Compatible waste container models: Dispo 2L - Septoeco PBS New 2L (AP Medical)

Shielded storage compartment

Dim. Total dimensions: L 311 x H 563 x P 437 mm

Shielding: 50 mm of lead

Airlock chamber

Inner dimensions: L 470 x H 232 x D 172 mm

Sliding tray: on slide rail - max. load: 10 kg

Effective dimensions of the sliding tray: L 406 x H 219 x D 134 mm

Shielding thickness: 30 mm of lead

Options

Second generator (as a replacement for the storage cabinet)

Front airlock chamber (as a replacement for the storage cabinet)

Second pot compartment (with electric lift)

Interlocking of airlock chamber doors (with electric strike)

Mediflash airlock chamber

Articulated shelf (max. load: 10 kg) Effective dimensions: L 300 x D 100 mm

Articulated tray for synthesis module: compatible with Mini AIO and EASYONE (Trasis) - FASTlab2™ (GE)

Dose calibrator measurement display screen (inside hot cell): 15 inches

Programmer: Controls 1 socket

Dry contact: information on the machines status

Pneumatic dipper raising system: Compatible with all Lemer Pax and Medisystem dose calibrators

Electric lock for generator compartment door

Partition wall (leaded 40 mm lead)**:** Sliding and waterproof, with separate ventilation system

Aeraulic

Exhaust air flow rate: 120 m^3/h

Extraction filtration: Active carbon filter

Work surface air quality: Class A

Laminar flow filtration: HEPA filter

Negative pressure inside the hot cell: -180 Pa (+/- 20 %)

Airlock chamber and generator air quality: Class C

Extraction fan shutdown: Yes

Electrical

Supply voltage: 230 V

Maximum absorbed current / Electrical data / Current consumption: 16 A / 2 Poles+G 50 Hz / 3 A

Interior power sockets: 8 sockets (electrical, RJ45 or USB as required)

Installation requirements

Floor load: 7,8 t/m^2

Door passage width: 1 190 mm without disassembly
835 mm disassembled

Diameter required for air extraction from the hot cell: Ø 125 mm

Compressed air (service or compressor): 6 bar, 20L/min

Package

Package dimensions: Contact us

Package weight (product without options): Contact us

Ref.: 00034536

MEDIFLASH
AIRLOCK CHAMBER

CLASS **C**

SHIELDED AIRLOCK CHAMBER WITH AUTOMATIC DOSE FRACTIONATING SYSTEM

HIGH **ENERGY**

PET

Download
the product data sheet
at lemerpax.com

The Mediflash airlock chamber is an **innovative shielded sampling system for automatic** dose **collection of high-energy** radiopharmaceuticals, e.g. labelled with **^{18}F** or **^{68}Ga**. This **Class C** airlock chamber **can be adapted** to the **Medi 9000 PET 2R** and **Medi 9000 Research 2R and 4R shielded hot cells** and is the essential additional equipment for **safe** fractionating of multi-dose vials and guarantees additional **radiation protection for hands and fingers** for users during dose preparations of the most irradiating radiopharmaceuticals.
With this system, **the patient dose is collected, measured** and packaged directly into a **sterile, radiation protected 10 mL syringe**, ready for administration to the patient with the injection units: **Jetti®, Manujet** and **Manujet Shield. A downgraded operating mode** has been developed in case of malfunction to allow the dose to be remotely sampled in manual mode, so as not to lose any of the radiation protection for hands and fingers offered by this system.

ASSOCIATED PRODUCTS

- Exposure reduction cover
- Medi 9000 PET 2R hot cell
- Medi 9000 Research 2R hot cell
- Medi 9000 Research 4R hot cell
- Jetti® injection unit
- Manujet injection unit
- Manujet Shield injection unit

FOCUS

The Mediflash airlock chamber is equipped with a **Scintidose dose calibrator** labelled as a **Class I medical device**. In order to allow **reliable preparation** of the patient's prescription regardless of the concentration of the stock solution, Lemer Pax & Medisystem have developed a "volumetric" calibration which allows to automatically apply the right calibration coefficient during the dose preparation. This specific calibration automatically overcomes the possible deviation between the required volume and the dose calibrator iso-measurement area.
Sampling is carried out via remote control on which the operator can activate the filling of the syringe with the "+" button, or command an emptying of the syringe with the "-" button, which is necessary when rinsing the kit, for example.
To **enhance user safety** and make **Mediflash simple and intuitive to use**, a volume detection system is installed on the equipment, so that any potential malfunction can be detected and the user will be alerted.

The syringe cartridge has been specially designed with a spring system, which releases the syringe from the tungsten shield to ensure measurement without shield attenuation for **perfect accuracy**. The collected dose is then received by the operator directly into its cartridge with its **tungsten syringe shield. A manual plunger** that fits onto the cartridge is also provided for **downgraded dose collection**.

CHARACTERISTICS

General
External dimensions: L 549 x D 445 x H 395 mm
Airlock chamber weight: 270 kg
Exterior finish: Painted steel RAL 9010 + ABS
Interior finish: Delrin
Standard equipment: - 1 airlock chamber with dose calibrator through chamber 2/3 - 1 peristaltic pump - 1 inclined pot support - 1 remote control - 1 cartridge with 1 tungsten syringe shield 9 mm
Shielding thickness: 40 mm of lead
Dose calibrator compartment
Shielding thickness: 40 mm of lead
Dose calibrator brand: Lemer Pax
Aeraulic
Airlock chamber air quality: Class C
Package
Package dimensions: L 700 X D 600 X H 800 mm
Package weight: 530 kg

Associated equipment (supplied with the Mediflash airlock chamber), to be installed in Medi 9000 Research or Medi 9000 PET hot cells:
A peristaltic sampling pump [**1**] and an **inclined pot support** [**2**] to ensure that the entire volume of the vial is withdrawn, are supplied with the airlock chamber to allow **safe fractionating** and, if necessary, **safe dilution** of the vials (subject to the fitting of a needle and an air vent filter in the vial).
A needle insertion support [**3**] allows, by using the sampling vial kit, the connection between the stock solution and the patient syringe located in the cartridge.

CONSUMABLES

Sterile syringe kit
Ref. 00008218

Sterile vial kit
Ref. 00007030

Radiation protection:		
Maximum radioactivity that can be handled to obtain a dose rate less than 25 µSv/h at 5 cm from the walls*		
Radionuclides	**Maximum radioactivity that can be handled for the stock solution** (The source being positioned in a 30 mm lead pot)	**Maximum radioactivity that can be handled in the cartridge, positioned in the Mediflash airlock chamber**
^{18}F	97,9 GBq	3,74 GBq
^{131}I	71 GBq	6,48 GBq
^{68}Ga	3,22 GBq	702 MBq
^{177}Lu	5,55.10^{9} TBq	3,45.10^{5} TBq
Ref.:	**00027316**	**00026987**

*Regulations in ASN Guide No.32 "In vivo nuclear medicine facilities: minimum technical rules for design, operation and maintenance"

GALLIUM 2R
HOT CELL

CLASS **A**

SHIELDED HOT CELL FOR SYNTHESIS, RADIOLABELLING AND FRACTIONATING OF ^{68}GA LABELLED RADIOPHARMACEUTICALS

HIGH **ENERGY**

PET

The **Gallium-68** shielded hot cell is a hot cell with **2 glove ports** for **the preparation of high energy ^{68}Ga** labelled radiopharmaceuticals mainly for **PET** activity. It is specially designed to perform elution, **radiosynthesis, radiolabelling** and **fractionating** operations, and can accommodate the automatic synthesis modules and Germanium generators currently available on the market. The work surface is highly modular and can be **customised** as required and the compartments can be interchanged if necessary.

With its **controlled** and **secure particle class A (ISO 5)** working environment, with a **laminar flow**, it complies with the conditions of good practice related to the use of ^{68}Ga in nuclear medicine.

Biological protection is provided by **50 mm lead shields** and **158 mm lead glass**, thus ensuring that the user is **adequately protected** during daily activities.
It is fully lined with **316L stainless steel**, which is a **hygienic** material, and is **easily decontaminated** and its **work surface is acid-resistant.**

ASSOCIATED PRODUCTS

- Medi handling tongs
- Exposure reduction cover
- Easyview HE syringe shields
- Mediclic HE syringe shields
- Medi HE carrier
- Easybox HE carrier
- Manubox trolley

REGULATORY FRAMEWORK

The Gallium-68 2R hot cell meets the requirements of the **European machinery 2006/42/EC** and electromagnetic compatibility **2004/108/EC** directives.
It enables the requirements of **good preparation practices** (GPP & GMP) for radiopharmaceutical drugs to be met, provided that the customer also implements suitable procedures.
In terms of radiation protection, this shielded hot cell meets the requirements of the **European Directive 96/29 EURATOM of 29 June 1996**. It guarantees a **dose rate at 5 cm from the walls of less than 25 µSv/h** for the operator.

In order to also meet the requirements of **the order of 16 January 2015 approving Decision No. 2014-DC-0463 of the French Nuclear Safety Authority (ASN)** mainly concerning the ventilation and negative pressure of the shielded hot cell, the Gallium-68 2R can be immediately connected to the ventilation network, independently of the rest of the building, with a 100 mm diameter suction outlet located on the ceiling of the room. It is fitted with an exhaust fan (measurement at the cell outlet 120 m^3/h, 1.7 m/s) located after the filtration system and allows to obtain a 250 Pa negative pressure inside the cell.

The hot cell is fitted with a self-contained ventilation and filtration system composed of a HEPA inlet filtration and aerosol and active carbon outlet filters.

Class A controlled atmosphere zone (GMP criteria) under laminar flow is provided along the entire surface of the work surface by 2 fans. The generator/pot compartment and the airlock chambers feature an independent air ventilation/filtration system ensuring the Class C air quality (GMP criteria). The different air classes in the cell are measured in accordance with standard ISO 14644.

OPTIONS

SECOND LATERAL AIRLOCK CHAMBER	to optimise and order the inserting and removing of accessories and patient dose.
MULTIDOSE POT COMPARTMENT	in replacement of the generator compartment to perform fractionating back-ups of ^{18} F-FDG fluorinated radiopharmaceuticals.
HINGED SHELF	for storage of the various accessories and consumables used on a daily basis without cluttering the work surface.
ARTICULATED TRAY	for synthesis module.
ELECTRICAL POWER SOCKET PROGRAMMER	to manage the use of the electrical accessories present on the work surface.
POSILIFT AUTOMATIC DIPPER RAISING SYSTEM	for dose calibrator to reduce exposure to the hands and fingers, requiring the use of only one hand during measurements.
SECOND LIQUID WASTE BIN COMPARTMENT	to secure liquid radioactive discharges after a synthesis.

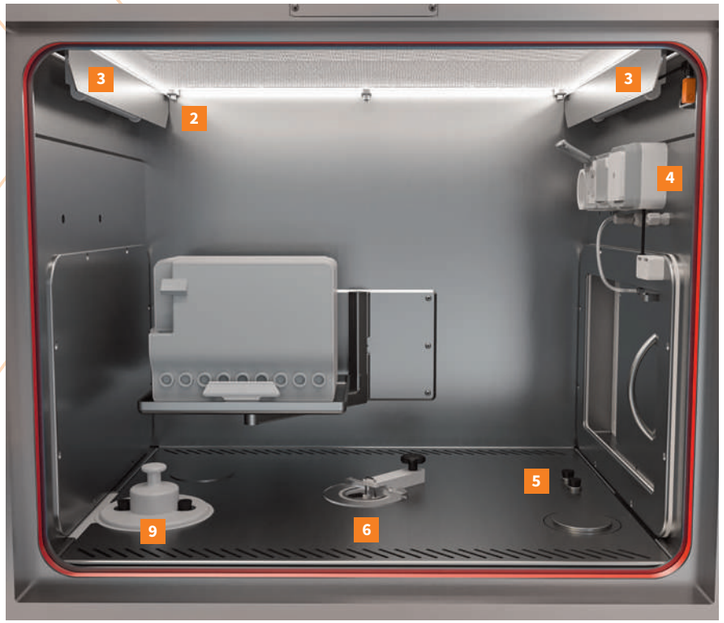

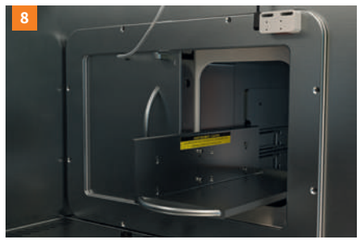

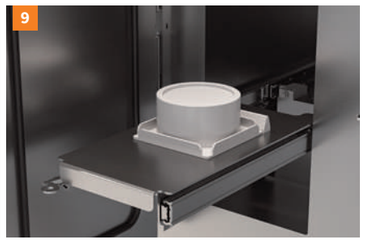

FOCUS

The front of the **work surface** is fitted with an **air tight window made of transparent PMMA** [1] **secured** with a position sensor allowing, in a Class A environment, the ergonomic installation of the cold kits and accessories required before starting radiosynthesis, while avoiding the bulk structure of the 50 mm lead shielded front door.
The lighting is provided with **LED strips** [2] and **two UV germicidal tubes** [3] with a timer are placed at each end of the work surface.

Electrical, USB or RJ45 sockets [4] are available as well as **4 capillary passages** to connect to the generator(s) (if positioned in the lower housing) and the liquid waste bin. One wall penetration is provided for the external connection of PLCs, if required.

The generator compartment with a 50 mm lead shield, is accessible through two capillary passages in the work surface [5], and is equipped with a secure, lockable electric latch plate. It features a **sliding tray** for easy positioning of the Germanium generator regardless of the model and supplier.

The 50 mm lead shielded dose calibrator compartment [6] allows the installation of Lemer Pax, Medisystem, Veenstra, Capintec measuring devices. The automatic dipper raising system option allows to **reduce operator exposure** and provides **unparalleled freedom of movement.**

The waste bin compartment [7] allows the arrangement of **2 waste bins** on a sliding tray: one for solid waste and one for liquid waste with **independent access to** the work surface. Containers are removed from under the work surface through a 50 mm lead-lined, lockable door.

The lateral airlock chambers with a 40 mm lead shield [8], are each equipped with a robust stainless steel **sliding tray**, to insert and remove accessories and patient doses.

The multidose pot compartment [9] (optional) features a 40 mm lead shield and integrated tray and lift. In this case, the Germanium generator can be positioned either in place of the liquid waste bin (behind the solid waste bin) [7] or directly on the work surface.

CHARACTERISTICS

General

External dimensions* (1/2 airlock chambers): L 1 656/1 970 x D 925 x H 2 455 mm

Hot cell tare weight (1/2 airlock chamber): 6 350/6 600 kg

Exterior finish: 304L brushed stainless steel grade 220

Interior finish: 304L stainless steel (walls) and 316L stainless steel (work surface)

Standard equipment:
- 1 airlock chamber
- 1 shielded Ga/Ge generator compartment
- 1 shielded compartment - dose calibrator
- 1 shielded solid waste bin compartment
- 1 shielded liquid waste bin compartment
- shielded cable chicane outside

Type of lighting: LED

Brightness: > 1 000 Lux

Germicidal UV: 2 UV C tubes with timer

Noise level: < 65 dB(A)

Shielding thickness: 50 mm of lead

Radiation protection:

Maximum radioactivity that can be handled to obtain a dose rate less than 25 µSv/h at 5 cm from the walls**

Radionuclides	Maximum radioactivity that can be handled
^{18}F	594 GBq
^{131}I	279 GBq
^{68}Ga	7,42 GBq
^{177}Lu	2,73.10^{10}TBq

Calculation conditions: sources positioned in a 30 mm lead pot

Work surface

Total dimensions: L 780 x D 584 x H 635 mm

Effective dimensions: L 745 x D 579 x H 565 mm

Work surface height: 1 017 mm

Work surface finish: 316L stainless steel

Shielding thickness: 50 mm of lead

Number of glove ports: 2

Diameter of the glove ports: Ø 186 mm

Glove port axis height: 1 125 mm

Effective dimensions of the standard lead glass viewing window: L 330 x H 240 x Th. 158 mm

Waterproof plexiglass walls: mounted on hinges with closing sensor

Generator compartment

Total dimensions of the compartment: L 210 x D 524 x H 507 mm

Maximum generator size: L 205 x D 480 x H 244 mm

Number of generators: 1

Security and closing of the compartment: electric latch, lockable

2 capillary passages to the work surface: 2

Shielding thickness: 50 mm of lead

Compatible generator models:
Galli Eo (IRE)
GalliaPharm and IGG100 (Eckert& Ziegler)
ITG (RadioMedix)

Dose calibrator compartment

Effective dimensions: Ø 228 x H 545 mm

Shielding thickness: 50 mm of lead

Dose calibrator brands: Lemer Pax, Medisystem, Capintec, Veenstra

Waste bin compartment

Effective dimensions: L 210 x D 524 x H 436 mm

Number of bins: 2 (1 liquid and 1 solid)

Shielding thickness: 50 mm of lead

Removal of the waste bins: from the front, on sliding tray

Compatible waste container models:
Dispo 2L
Septoeco PBS New 2L (AP Medical)
SharpSafe 7L square

Airlock chamber

Inner dimensions: L 440 x D 182 x H 232 mm

Sliding tray on slide rail max. load 15 kg

Dim. Effective dimensions of the sliding tray: L 342 x D 139 x H 209 mm

Shielding thickness: 40 mm of lead

Front door opening systems: interlocked

Options

Multidose pot compartment in place of the generator compartment

Large viewing window L 600 x H 240 x Th. 158 mm

Second airlock chamber

Side opening of airlock chamber doors

Automatic dipper raising system dose calibrator dipper raising and lowering system

Tray for synthesis module: size according to PLC

Articulated shelf

Second liquid waste bin location: Ø 97 x 224 mm

Socket programmer

Extraction fan shutdown

Dry contact

Aeraulic

Exhaust air flow rate: 120 m^3/h

Extraction filtration: Active carbon filter + HEPA filter

Work surface air quality: Class A

Laminar flow filtration: HEPA H14 filter

Negative pressure inside the hot cell: -180 Pa (+/- 20 %)

Airlock chamber and generator air quality: Class C

Electrical

Supply voltage: 230 V

Maximum absorbed current / Electrical data / Current consumption: 16 A / 2 Poles+G 50 Hz / 3 A

Interior power sockets: 2 sockets (electrical, RJ45 or USB as required)

Installation requirements

Floor load: 4,8 t/m^2

Door passage width: ≥ 100 cm

Diameter required for air extraction from the hot cell: Ø 100 mm

Compressed air (service or compressor): 6 bar, 20 L/min

Package

Package dimensions: Contact us

Package weight (product without options): Contact us

Ref.: 00025535

EFFECTIVE DIMENSIONS (mm)

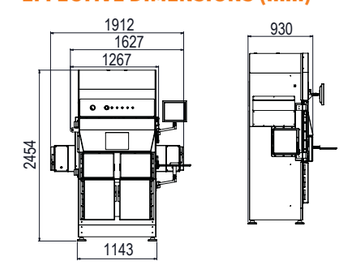

Airlock chamber with side opening

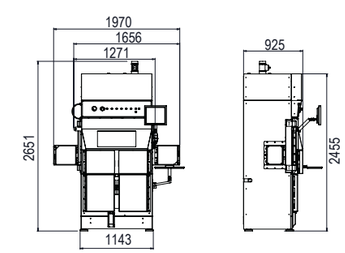

Airlock chamber with front opening

Download the product data sheet at lemerpax.com

* The dimensions must be confirmed by a layout drawing
**Regulations in ASN Guide No.32 "In vivo nuclear medicine facilities: minimum technical rules for design, operation and maintenance"

HBI

BENCHTOP INCLINED SHIELDED WINDOW

ALL **ENERGIES**

HBI5 Medisystem model,
with 5 mm shield

The ergonomic 45° angle of the upper part of the Lemer Pax models HBI5, HBI10, HBI20, HBI30, HBI60 provides the operator with a **full view of the work area**, whether **standing or sitting**.

The HBI range of inclined shielded windows are **radiation protection shields** with a **large viewing window** made of lead glass that can be positioned **on any type of benchtop**. With **5 shields available** - 5, 10, 20, 30 and 60 mm lead - they are suitable for a wide range of handling operations of various low, medium and high energy radioisotopes, dedicated to SPECT and PET activities in nuclear medicine, while allowing a significant **reduction of full-body exposure** for the operator.

These windows feature an **anti-tipping** design. The structure is made of painted steel and the lower part is made of **durable, shockproof, robust** and **easy to maintain** white Corian® for radioactive and bacteriological decontamination using impregnated wipes or direct spraying with a decontaminant spray. The **innovative design** of the inclined shielded windows provides a **completely safe working area** in the event of radioactive contamination due to the liquid retention groove that completely surrounds the working area and can contain any radioactive liquid spillage.

The HBI5, a 5 mm Medisystem lead shielded model with a 15° angle, is ultra light (16 kg) and easily movable while offering an extra-large viewing window of dimensions L 270 x H 370 mm. The working space is reduced to obtain a screen effect when installed in a laminar flow hood for example. It is made of corrosion-resistant 304L stainless steel and is bead-blasted for a smooth, satin finish that allows for easy cleaning and decontamination.

Download
the product data sheet
at lemerpax.com

CHARACTERISTICS

General	HBI 5	HBI 10	HBI 20	HBI 30	HBI 60	HBI Medi
External dimensions:	L 405 x D 399 x H 560 mm		L 405 x D 399 x H 569 mm	L 405 x D 399 x H 618 mm	L 405 x D 399 x H 589 mm	L 309 x D 252 x H 411 mm
Height when inclined:	H 308 mm		H 325 mm	H 378 mm	H 410 mm	H 20 mm
Viewing window dimensions:	L 320 x H 197 mm		L 320 x H 198 mm	L 320 x H 270 mm	L 200 x H 140 mm	L 270 x H 370 mm
Window inclination:	45°					15°
Lead glass thickness:	8 mm	24 mm	40 mm	64 mm	104 mm	12 mm
Weight:	43 kg	67 kg	106 kg	164 kg	275 kg	16 kg
Radiation protection:	5 mm of lead	10 mm of lead	20 mm of lead	30 mm of lead	60 mm of lead	5 mm of lead
Lower part / work area: Dimensions:	L 390 x D 365 mm			L 390 x D 352 mm	L 390 x D 315 mm	L 292 x D 222 mm
Materials:	Corian® white					304L bead blasted stainless steel
Specific features:	Peripheral groove for liquid retention					Flat and smooth
Package						
Package dimensions:	L 850 x D 650 x H 750 mm					Contact us
Package weight (product without options):	80 kg	110 kg	150 kg	205 kg	310 kg	Contact us
Ref.:	00033337	00037164	00037179	00042257	HBI 60	00041119

MOBILE **SHIELD**

MOBILE RADIATION PROTECTION SHIELD FOR LAMINAR FLOW HOOD OR MICROBIOLOGICAL SAFETY CABINET

LOW & MEDIUM **ENERGY**

This **mobile shield** with 10 mm lead **shielding** allows to **reduce full-body exposure** during preparations, radiolabelling, quality control, isotopic cell labelling and other handling operations of **low and medium energy SPECT** radioisotopes such as ^{99m}Tc for example. With its **3 available heights**, it is perfectly adapted to work under a laminar flow hood or in a microbiological safety cabinet. It is also possible to request a **specific height** with the **innovative design of its frame**. Its positioning and **stability** are secured by 4 castors, each equipped with a brake.
Its wide, 12° angle **radiation protection viewing window** ensures **visual control of** the current operation.

Download
the product data sheet
at lemerpax.com

The 10 mm lead equivalent **shielding is optimised** as it is located both **on the lead shield** [**1**], **the laminated lead glass viewing window** [**2**], and also on **the entire shielding base** [**3**], which slides under the work surface of the laminar flow hood or microbiological safety cabinet, in order to provide **additional protection** for the user gonads in the case of complex and long radioisotope manipulations requiring work in a seated position. Its structure is made of painted steel, which allows for **quick and easy daily cleaning** with disinfectant wipes or by direct spraying with disinfectant spray or other decontaminant products.

EFFECTIVE DIMENSIONS (mm)

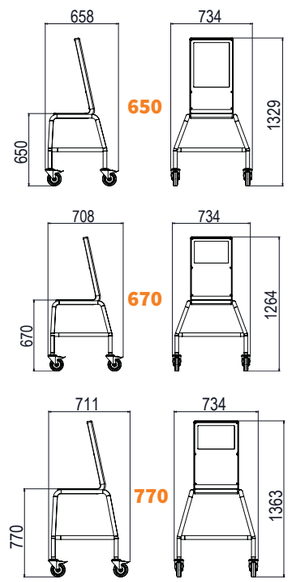

CHARACTERISTICS

General	Total height 650 mm	Total height 670 mm	Total height 770 mm
External dimensions:	L 734 x D 658 H 1 329 mm	L 734 x D 708 H 1 264 mm	L 734 x D 711 H 1 363 mm
Structure	Painted steel		
Height when inclined:	650 mm	670 mm	770 mm
Viewing window dimensions:	L 320 x H 210 mm		
Window inclination:	12 °		
Lead glass thickness:	24 mm		
Mobility:	4 castors with brakes		
Weight:	106 kg	107 kg	108 kg
Radiation protection:	10 mm of lead		
Package			
Package dimensions:	Contact us		
Package weight:	Contact us		
Ref.:	00034521	00032763	00031364

LEAD BRICKS & **PLASTIC SHELLS**

PROTECTION AGAINST GAMMA RADIATION WHEN HANDLING, STORING OR TRANSPORTING RADIOACTIVE SOURCES

ALL **ENERGIES**

SPECT **PET**

ASSOCIATED PRODUCTS

- Medi handling tongs
- Positong handling tongs
- PFE/PME/PHE vial shields
- Medi 24 vial shields

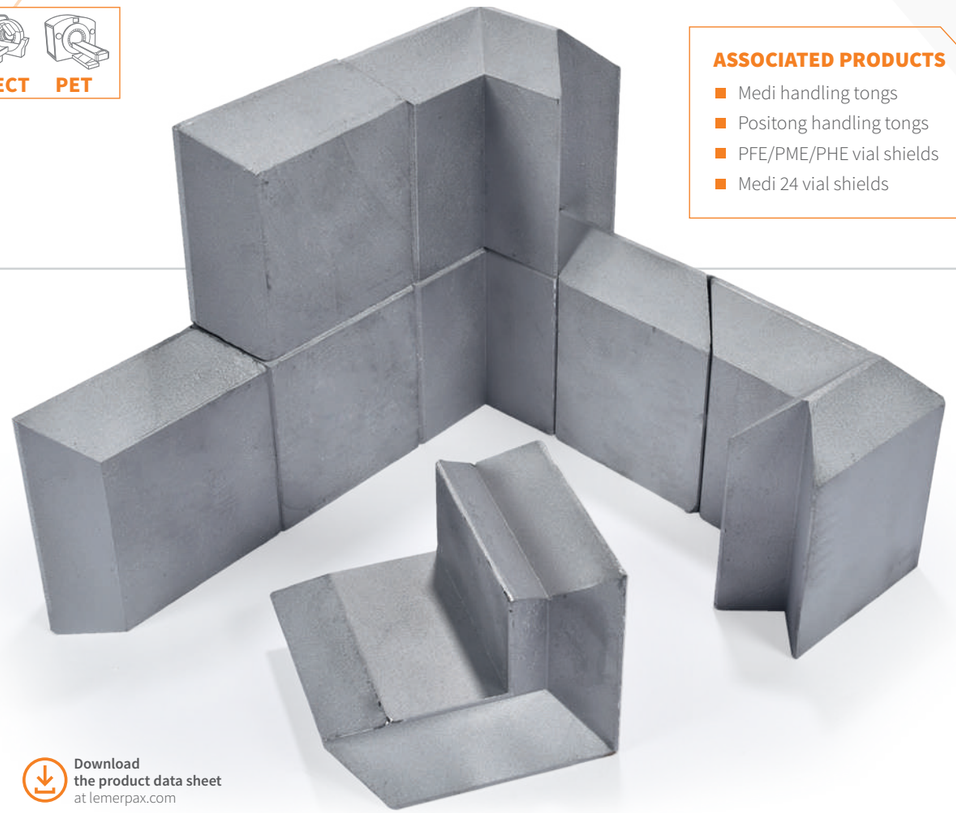

Download
the product data sheet
at lemerpax.com

The Lemer Pax **interlocking or parallelepiped shaped lead bricks** offer users **homogeneous radiation protection** without air bubbles or gaps. They are very **easy to use**, and allow for **quick** "lead castle" type **protection against gamma radiation** emitted during **laboratory handling, transport, storage** or **transfer of radioactive sources**, regardless of the duration. These **modular** and **removable** shielding systems allow to create any required shape by placing lead bricks side by side, end to end or on top of each other. Lemer Pax lead bricks meet the requirements of **ISO 9404-1** and **ISO 7212 standards**.

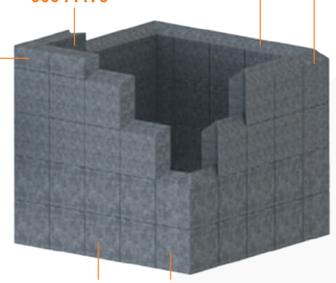

PLASTIC SHELL

Lemer Pax has been designing and manufacturing lead bricks since its beginnings. In 2020, Lemer Pax innovated in this field with the introduction of a new product: **the plastic shell**.

Combined with lead bricks, it guarantees **uniform radiation protection** while **protecting the health of operators** and avoiding direct contact with lead.

Lead bricks are **re-usable and modular** and can be used to create **made-to-measure walls** for all gamma ray shielding applications. With an ultra-short lead time, lead shielding in nuclear medicine becomes a simple operation to **isolate, store, transfer or transport radioactive sources in laboratories, medical imaging rooms** or other specific source **decay** locations.

With their **easy to change plastic shells**, decontamination is easier and the bricks' **service life** is extended.

CHARACTERISTICS

General	BASE BRICKS		ORDINARY BRICKS		1/2 TOP BRICKS	
	Normal base brick	Corner base brick	Normal ordinary brick	Corner ordinary brick	Normal top 1/2 brick	Corner top 1/2 brick
Dimensions:	L 100 x H 100 x Th. 50 mm				L 50 x H 100 x Th. 50 mm	
Weight:	6,2 kg	9,4 kg	5,5 kg	8,3 kg	2,1 kg	3,1 kg
Ref.:	00044472	00044480	00044474	00044478	00044476	00044482

General	PARALLELEPIPED BRICKS	FRAMES		
Dimensions:	L 200 x H 100 x Th. 50 mm	L 200 x H 200 x Th. 50 mm	L 200 x H 200 x Th. 100 mm	L 300 x H 300 x Th. 150 mm
Weight:	11,1 kg	9 kg	18 kg	53 kg
Ref.:	PP1	00019474	00006890	00010687

L-BLOCK

RANGE OF SELF-CONTAINED PROTECTIVE SCREENS FOR RADIOPHARMACEUTICAL PREPARATIONS

ASSOCIATED PRODUCTS

- PHE vial shields
- Medi handling tongs
- Mediclic syringe shields HE
- Safety Storage range of shielded cabinets

HIGH **ENERGY**

PET

L-Block Simple

L-Block Cave Simple

The "L-Block" range of shielded screens with a radiation protection viewing window is designed in **bactericidal composite materials** by Lemer Pax and is available in **5 products of different configurations** to meet **all applications in open systems** during the handling of **high-energy radiopharmaceuticals in nuclear medicine PET activity**. **Preparations, measurements and fractionating** are possible in **manual or automatic** mode depending on the L-Block model selected. The **radiation protection** of this **wide range** of shielded screens, provided to **reduce the full-body exposure of users**, consists in **60 mm lead shields** and **104 mm** thick **laminated lead glass**. In order to offer the same level of ergonomics for any configuration, all models feature a shielded window that can be tilted from 20 to 50°.

L-Block Telemetry

L-Block Cave with dose calibrator

L-Block Cave Automatic

L-BLOCK **SIMPLE**

HIGH **ENERGY**

PET

Download **the product data sheet** at lemerpax.com

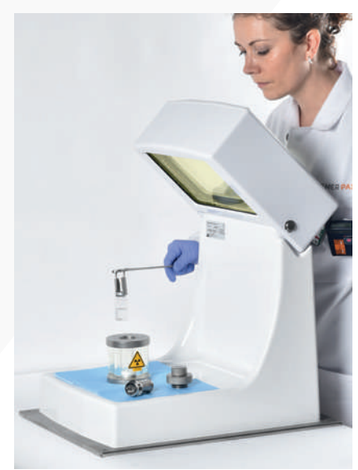

As an entry-level model, the **L-Block Simple** is the shielded screen for **quick and easy handling**. With its **small footprint**, it is the ideal screen **for benchtop installation**.

EFFECTIVE DIMENSIONS (mm)

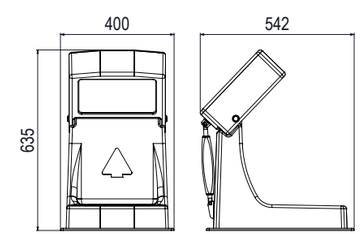

* The dimensions must be confirmed by a layout drawing

**Regulations in ASN Guide No.32 "In vivo nuclear medicine facilities: minimum technical rules for design, operation and maintenance"

ASSOCIATED PRODUCTS

- PHE vial shields
- Medi handling tongs
- Mediclic syringe shields HE
- Safety Storage range of shielded cabinets

CHARACTERISTICS

General

External dimensions*: L 400 x D 542 x H 635 mm

Weight: 220 kg

Materials: Composite

Exterior finish: RAL 9016 bactericidal

Shielding thickness: 60 mm lead shielding over all sides.

Radiation protection:

Maximum radioactivity that can be handled to obtain a dose rate less than 25 µSv/h at 5 cm from the walls**

Radionuclides	Maximum radioactivity that can be handled
^{18}F	3,57 TBq
^{131}I	975 GBq
^{68}Ga	15,5 GBq
^{177}Lu	$1{,}54.10^{12}$ TBq

Calculation conditions: sources positioned in a 30 mm lead pot located behind the L-Block front panel

Work surface

Dim. : L 311 x D 312 mm

Work surface height: 82 mm

Work surface finish: RAL 9016 bactericidal

Lead glass viewing window:

Total dimensions: L 337 x D 310 x Th. 128 mm

Angle: Adjustable from 20° to 50°

Adjustment system: Handwheel

Shielding: 55 mm of lead

Dimensions of the viewing window: L 268 x W 165 x Th. 104 mm

Lead glass density: 4,36

Options

Compatible with the Safety Storage range: Contact us

Non-shielded L-Block unit made to measure: Contact us

Installation requirements

Floor load: 1 058 kg/m²

Door passage width: 500 mm

Package

Package dimensions: L 400 x D 520 x H 800 mm

Package weight (product without options): 300 kg

Ref.: 00004958

L-BLOCK **CAVE SIMPLE**

HIGH **ENERGY**

PET

The **L-Block Cave Simple** offers **additional radiation protection** through its shielded side walls and thus forms a **closed and secure handling environment** that eliminates any risk of contamination. It comes with a sturdy stainless steel load-distribution plate for easy installation.

Download
the product data sheet
at lemerpax.com

EFFECTIVE DIMENSIONS (mm)

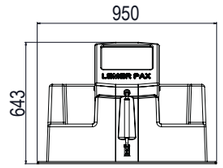

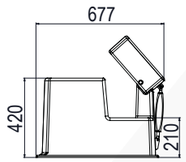

* The dimensions must be confirmed by a layout drawing
**Regulations in ASN Guide No.32 "In vivo nuclear medicine facilities: minimum technical rules for design, operation and maintenance"

ASSOCIATED PRODUCTS

- PHE vial shields
- Medi handling tongs
- Mediclic syringe shields HE
- Safety Storage range of shielded cabinets

CHARACTERISTICS

General

External dimensions*: L 950 x D 677 x H 643 mm

Weight: 810 kg

Materials: Composite

Exterior finish: RAL 9016 bactericidal

Shielding thickness: 60 mm lead shielding over all sides.

Radiation protection:

Maximum radioactivity that can be handled to obtain a dose rate less than 25 µSv/h at 5 cm from the walls**

Radionuclides	Maximum radioactivity that can be handled
^{18}F	3,57 TBq
^{131}I	975 GBq
^{68}Ga	15,5 GBq
^{177}Lu	$1,54.10^{12}$ TBq

Calculation conditions: sources positioned in a 30 mm lead pot located behind the L-Block front panel

Work surface

Dim. : L 620 x D 336 mm

Work surface height: 80 mm

Work surface finish: RAL 9016 bactericidal

Lead glass viewing window:

Total dimensions: L 337 x D 310 x Th. 128 mm

Angle: Adjustable from 20° to 50°

Adjustment system: Handwheel

Shielding: 55 mm of lead

Dimensions of the viewing window: L 268 x D 165 x Th. 104 mm

Lead glass density: 4,36

Options

Compatible with the Safety Storage range: Contact us

Non-shielded L-Block unit made to measure: Contact us

Installation requirements

Floor load: 1 254 kg/m²

Door passage width: 70 cm

304L stainless steel dispensing plate (supplied): L 950 x D 650 x Th. 12 mm

Package

Package dimensions: L 1 000 x D 750 x H 940 mm

Package weight (product without options): 900 kg

Ref.: 00017462

L-BLOCK **CAVE WITH DOSE CALIBRATOR**

HIGH **ENERGY**

PET

Download
the product data sheet
at lemerpax.com

ASSOCIATED PRODUCTS

- PHE vial shields
- Medi handling tongs
- Mediclic syringe shields HE
- Safety Storage range of shielded cabinets

The **L-Block Cave with dose calibrator** benefits from the **closed and secure environment** of the L-Block Cave with additional essential equipment to **perform radioactive source measurements: Scintidose dose calibrator.** It is supplied with a **measurement readout screen** and **sample dipper**, Lemer Pax offers the **option of a Posilift source lift**, providing users with considerable reduction in hand and finger exposure with this automatic foot-operated dose calibrator dipper raising system.

CHARACTERISTICS

General

External dimensions*: L 989 x D 702 x H 793 mm

Weight: 860 kg

Materials: Composite

Exterior finish: RAL 9016 bactericidal

Standard equipment: Scintidose dose calibrator chamber 2/3 with 25 mm lead peripheral shielding

Shielding thickness: 60 mm lead shielding over all sides.

Radiation protection:

Maximum radioactivity that can be handled to obtain a dose rate less than 25 µSv/h at 5 cm from the walls**

Radionuclides	Maximum radioactivity that can be handled
^{18}F	3,57 TBq
^{131}I	975 GBq
^{68}Ga	15,5 GBq
^{177}Lu	$1,54.10^{12}$ TBq

Calculation conditions: sources positioned in a 30 mm lead pot located behind the L-Block front panel

Work surface

Dim. : L 630 x D 346 mm

Work surface height: 80 mm

Work surface finish: RAL 9016 bactericidal

Lead glass viewing window:

Total dimensions: L 337 x D 310 x Th. 128 mm

Angle: Adjustable from 20° to 50°

Adjustment system: Handwheel

Shielding: 55 mm of lead

Dimensions of the viewing window: L 268 x D 165 x Th. 104 mm

Lead glass density: 4,36

Options

Posilift Automatic dose calibrator dipper raising and lowering system with foot control

Compatible with the Safety Storage range: Contact us

Non-shielded L-Block cabinet: Contact us

Installation requirements

Floor load: 1 286 kg/m²

Dispensing plate: 304L stainless steel L 950 x D 650 x Th. 12 mm

Door passage width: 80 cm

Package

Package dimensions: L 1 000 x D 750 x H 940 mm

Package weight (product without options): 1 000 kg

Ref.: 00007292

EFFECTIVE DIMENSIONS (mm)

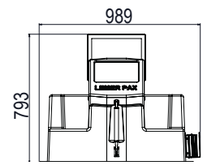

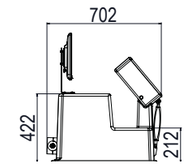

* The dimensions must be confirmed by a layout drawing
**Regulations in ASN Guide No.32 "In vivo nuclear medicine facilities: minimum technical rules for design, operation and maintenance"

L-BLOCK **CAVE AUTOMATIC**

HIGH **ENERGY**

PET

Download
the product data sheet
at lemerpax.com

ASSOCIATED PRODUCTS

- PHE vial shields
- Medi handling tongs
- Mediclic syringe shields HE
- Safety Storage range of shielded cabinets

The **L-Block Cave Automatic** is the **"all inclusive" model** of the range since it also features, in addition to the advantages of the other configurations, an **automatic patient** dose **collection system.** The **multidose radiopharmaceutical vial** is positioned with its transport pot in the centre of the L-Block, behind the shielded lead glass window. After the **specially designed Lemer Pax sampling kit** has been inserted, the vial is fractionated by **remote control. Dose measurement** is **directly** performed. **A filling detection system secures the samples** and alerts the operator in case of malfunction. With this system, the dose is packaged in a specific cartridge equipped with a tungsten shield and is ready for administration to the patient with one of the Jetti®, Manujet or Manujet Shield injection units.

CHARACTERISTICS

General

External dimensions*: L 1 059 x D 672 x H 791 mm

Weight: 901 kg

Exterior finish: Bead blasted 304L stainless steel

Standard equipment:
- Scintidose dose calibrator
- Posiflash sampling system with peristaltic pump
- Remote control
- Touchscreen
- 1 syringe cartridge
- 1 shielded syringe shield - 9 mm tungsten
- 1 electrical cabinet

Shielding thickness: 60 mm lead shielding over all sides.

Radiation protection:

Maximum radioactivity that can be handled to obtain a dose rate less than 25 µSv/h at 5 cm from the walls**

Radionuclides	Maximum radioactivity that can be handled
^{18}F	3,57 TBq
^{131}I	975 GBq
^{68}Ga	15,5 GBq
^{177}Lu	$1{,}54.10^{12}$ TBq

Calculation conditions: sources positioned in a 30 mm lead pot located behind the L-Block front panel

Work surface

Dim. : L 644 x D 365 mm

Work surface height: 80 mm

Work surface finish: 304L bead blasted stainless steel

Lead glass viewing window:

Total dimensions: L 337 x D 310 x Th. 128 mm

Angle: Adjustable from 20° to 50°

Adjustment system: Handwheel

Shielding: 55 mm of lead

Dimensions of the viewing window: L 268 x D 165 x Th. 104 mm

Lead glass density: 4,36

Associated consumables:

Vial sampler kit Ref.: 00007030

Syringe kit Ref.: 00008218

Options

Additional shielded cartridge Ref.: 00008480

Additional shielded syringe shield Ref.: 00021627

Compatible with the Safety Storage range: Contact us

Non-shielded L-Block cabinet: Contact us

Installation requirements

Floor load: 1 504 kg/m²

Dispensing plate: 304L stainless steel L 950 x D 650 x Th. 12 mm

Door passage width: 80 cm

Package

Package dimensions: L 1 000 x D 750 x H 940 mm

Package weight (product without options): 940 kg

Ref.: 00024802

EFFECTIVE DIMENSIONS (mm)

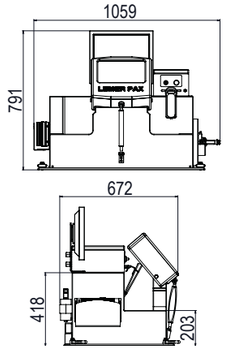

* The dimensions must be confirmed by a layout drawing
**Regulations in ASN Guide No.32 "In vivo nuclear medicine facilities: minimum technical rules for design, operation and maintenance"

L-BLOCK **TELEMETRY**

HIGH **ENERGY**

PET

ASSOCIATED PRODUCTS

- PHE vial shields
- Medi handling tongs
- Mediclic syringe shields HE
- Safety Storage range of shielded cabinets

Download
the product data sheet
at lemerpax.com

All models in the **L-Block range are compatible** with the **Safety Storage range of radiation protection cabinets**. The combination of these two product ranges offers users **secure working and storage environments** with considerable **space optimisation**, while ensuring appropriate **radiation protection** for the radioactive sources handled.
The high level of modularity of these two families of products makes it possible to create **customised sets** as required, **adapted to the specific uses of each service.**

The **L-Block Telemetry** is the latest possible configuration in the L-Block range. **It is modular** and available **with or without side walls** and is equipped with a **remote control ball joint** positioned on the right or left (as required). The Lemer Pax design engineering team will be able to study the required configuration, depending on the intended use.

L-BLOCK **AIR** ISO 5

MINI WORK TOP CABINET WITH OVERPRESSURE

LOW & MEDIUM **ENERGY**

SPECT

ASSOCIATED PRODUCTS

- Medi handling tongs
- PFE/PME vial shields
- Easysqueeze syringe shields

Download
the product data sheet
at lemerpax.com

CHARACTERISTICS

General
Overall external dimensions*: L 658 x D 412 x H 700 mm
Effective dimensions: L 535/360 x D 368 x H 340 mm
Tare weight: 110 kg
Exterior finish: ABS
Interior finish: PVC
Type of lighting: LED
Brightness: > 1 000 Lux
Noise level: < 65 dB(A)
Shielding thickness: 15 mm of lead on the front 4 mm of lead on the sides, at the back and on the work surface
Lead glass window: L 254 x D 204 x Th. 16 mm
Work surface air quality: ISO 5
Laminar flow filtration: HEPA filter
Ref.: Contact us

* The dimensions must be confirmed by a layout drawing

The L-Block Air ISO 5 is a self-contained, mini work top shielded cabinet with overpressure for the containment of Low and Medium Energy radioisotopes. The **radiation protection** consists of **lead screens** on all sides of the cabinet (15 mm at the front and 4 mm at the back and on the sides) and a 16 mm thick **laminated lead glass window** [**1**] at the front, at a 23° angle, for **full visibility of the work surface** and ergonomic use. Two side ports [**2**] on each shielded door [**3**] are available to facilitate the passage of arms into the **workspace ventilated with laminar flow**. The **completely removable work surface** [**4**] is made of white PVC, a **smooth, waterproof** and **durable** material. The **self-contained ventilation and filtration system** of the L-Block Air consists in a **self-regulating fan** in the technical compartment [**5**] at the top as well as a **pre-filter** [**6**] and a **HEPA H14 filter**. A filter saturation indicator [**7**] protects the users and alerts them when required. Its **small size** and **light weight (110 kg)** make it an **easy and quick to install stand-alone unit**, without any need to connect to the ventilation system of the room in which it is placed.

PDA SUPPORT

SUPPORT FOR THE PREPARATION OF DOSES TO BE ADMINISTERED

ALL **ENERGIES**

SPECT **PET**

1 | Main housing for the vial shield
2 | Needle recapper
3 | Identification
4 | Solute housing

ASSOCIATED PRODUCTS

- PFE/PME/PHE vial shields
- Medi 24 vial shield
- Cont'Elu elution pots

Ref.: 00025777

Download
the product data sheet
at lemerpax.com

EFFECTIVE DIMENSIONS (mm)

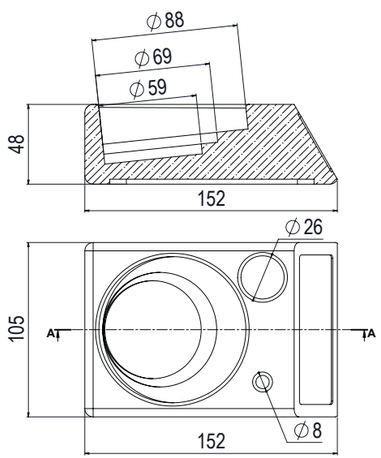

The PDA support is a **vial shield support** for the preparation of doses to be administered. It allows for **rapid identification** of the various preparations required for SPECT and PET scintigraphic examinations. With the identification labels (6 colours available), placed on the front of the support, the operator can constantly check the volume available in the vial, while eliminating the risk of preparation selection errors.

The Preparation of Doses to be Administered support allows for **optimised management of the workspace** in shielded hot cells, microbiological workstations or laminar flow hoods as well as work benches. It provides the operator with 3 specific locations each suitable for:
- the vial shield, with 3 different cavities adapting to many models, positioned at an angle, to facilitate the sampling of patient doses
- a NaCl 0.9 % ampoule, to avoid cross-contamination between the different preparations
- protection of the sampling needle, to allow recapping without risk of accidental pricking

The PDA support is entirely made of Delrin® type POM, a smooth and robust material, and guarantees easy and total disinfection and decontamination by immersion or with wipes.

The PDA support is the result of successful collaboration between the Lemer Pax R&D department and Mickaël Chaussard, Radiopharmacist and the professional baccalaureate section of the Henri Nominé technical school in Sarreguemines (France).

AVAILABLE LABEL COLOURS

SHIELDED DRY BATH

LOW & MEDIUM **ENERGY**

SPECT

ASSOCIATED PRODUCTS

- Medi handling tongs
- Positong tongs

Download
the product data sheet
at lemerpax.com

CHARACTERISTICS

General Shielded heating dry bath
External dimensions: L 200 x D 234 x H 96 mm
Temperature range: 5 to 150°C max.
Heating system time: 1 hour in stabilisation
Temperature display resolution: 0,1 °C
Power: 200 W
Standard electrical specifications: 230 V, 50-60 Hz (also available in 115 V - Ref: 00043732)
Weight: 6,12 kg
Rack block
Total dimensions: L 95 x D 75 x H 49 mm
Number of slots: 6
Radiation protection: 5 mm of lead
Ancillary equipment provided
Thermometer: With stainless steel probe Measures up to 150°C Battery operated
Extraction handle: Stainless steel, for removing the lead vial rack block after heating
Package
Package dimensions: L 330 x D 280 x H 170 mm
Package weight: Contact us
Ref.: 00014837 (230 V) / 00043732 (115 V)

The shielded dry water bath is used during the heating stages of certain **radiolabelling** operations or **reconstitution of cold kits** with radioisotopes such as **^{99m}Tc**. It can be installed on a benchtop, behind a screen, with its **5 mm lead shield**, or integrated into the Easypharma Compact® and 4R **Low and Medium Energy** hot cells or into the PSMEB. This **high-precision digital** dry block heater is **microprocessor controlled** with a setting resolution of one **tenth of a degree**.

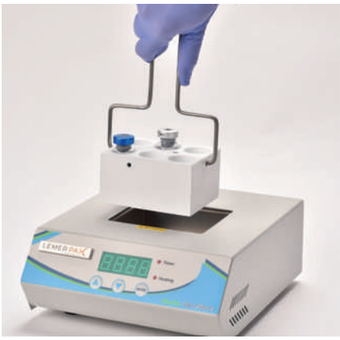

The set temperature, which can range from **5 to 150°C**, is automatically stored in the memory if the appliance is switched off or in the event of a power failure.
The bath also features an **independent built-in digital timer** with an audible alert when the time is up **without interrupting the heating**. The dry water bath is available in **two versions for 230 V and 115 V power supplies** to meet the electrical requirements of all countries. It is supplied with **a thermometer** [**1**], fitted with **a stainless steel probe** [**2**], for **improved accuracy** and to ensure the actual temperature inside the **vial rack** [**3**]. This shielded rack is made of **5 mm lead** coated with Teflon (PTFE) and features **6 slots with different diameters**, which can be modified on request, to adapt to several vial models and **sizes. A stainless steel handle** is also provided to remove the rack after the heating time and prevent burns.
A **heating/cooling unit** reference with **Peltier design and high energy efficiency** allowing to cool or heat the preparations from -10 to 100°C is also available (contact us for more information).

EFFECTIVE DIMENSIONS (mm)

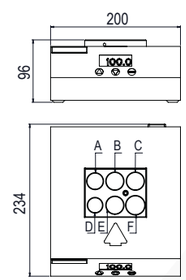

Indice	Diameter (mm)	Depth (mm)
A	24.5	30
B	26.5	40
C	26.5	42
D	22.5	40
E	26.5	37
F	28.5	47

SHIELDED STIRRER

LOW & MEDIUM **ENERGY**

SPECT

ASSOCIATED PRODUCTS

- Medi handling tongs
- Positong tongs

Download
the product data sheet
at lemerpax.com

CHARACTERISTICS

General
External dimensions: L 137 x D 172 x H 145 mm
Vial wedge dimensions: Ø31 x H 39 mm / Ø26 x H 39 mm
Weight: 4,8 kg
Radiation protection: 6 mm of lead
Power supplies and speeds of rotation: 230 V / 50Hz 100 to 2,500 rpm 230 V / 60Hz 200 to 3,200 rpm
Movement: Circular vibration
Speed controller button: Scale with reference points
Operating modes: Continuous or automatic with slide switch
Package
Package dimensions: L 220 x D 200 x H 150 mm
Package weight: 8 kg
Ref.: 00035007

The **shielded stirrer** is an essential accessory for certain **kit reconstitutions** requiring stirring time when radiolabelling with **^{99m}Tc** for example. It fits perfectly into Easypharma Compact® and 4R Low and Medium Energy hot cells while providing additional radiation protection with its **6 mm lead shield** around the vial [**1**].

Two models of vial bottle adapters (26 and 31 mm diameter) are supplied with the product to fit several types of bottles of various capacities.

With a **vortex type circular vibration movement**, controlled by a **speed control knob** [**2**], **the speed** can be varied over **a very wide range** from **100 to 2,500 revolutions per minute** with a 230 V power supply. It is **very simple to use,** and ready to use after simply pressing the **power button** [**3**]. To assist the user, a **scale with reference points** [**4**] is provided to select the recommended rotation setpoint.
With the **slide switch** [**5**], the user can change the operating mode at any time from **"Continuous"** to **"Automatic"**, where the stirring stops as soon as the vial is removed from the system for **enhanced safety**.

EFFECTIVE DIMENSIONS (mm)

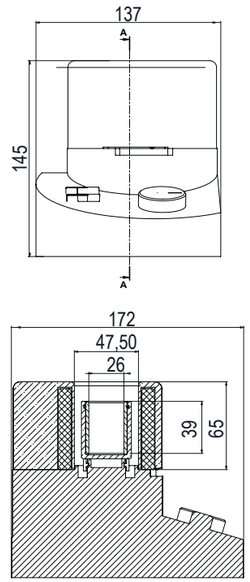

POSITONG TONGS

VIAL MANIPULATION TONGS

ALL **ENERGIES**

ASSOCIATED PRODUCTS

- PFE/PME/PHE vial shields
- Medi 24 vial shield
- Cont'Elu elution pots

Positong tongs have been specially developed for **safe** and easy **handling** and **gripping of irradiating vials** during the preparation and fractionating of radiopharmaceutical drugs in **SPECT and PET** nuclear medicine, regardless of the size of the vial and the radioisotope handled (^{99m}Tc, ^{201}Tl, ^{123}I, ^{177}Lu, ^{131}I, ^{18}F, ^{68}Ga, etc.). Their **3 different available lengths**, 250, 350 and 500 mm are **suitable for all vial manipulations** (elution, radiolabelling, measurement, sampling), regardless of the available working volume, large or small, and the environment of use: shielded hot cell, laminar flow hood, microbiological safety station, on a bench, behind a shielded viewing window.

Positong tongs are suitable for both right and left handed users and are the only **scalable** handling tongs on the market, with options and accessories that offer users 3 possible configurations:

- **The "simple all-purpose" configuration** [1] is suitable for routine daily use. This model takes up minimal space in the work space or on a shelf. Maintenance: cleaning and decontamination are easy and possible even by immersion in a suitable bath, with their simple construction in 304L stainless steel, without springs or complex parts.
- **The "safety +" configuration** [2] with a **removable** fibrous epoxy **handle** takes vial handling **safety to a higher level**, preventing accidental release of the vial.
- **The "full safety" configuration** [3] consists of both the handle and a **removable radiation protection shield**, also made of tungsten composite (6 mm lead equivalence), to add additional protection to the users' hands and fingers.

Download the product data sheet at lemerpax.com

CHARACTERISTICS

General						
Tong length:	250 mm		350 mm		500 mm	
Model (handle):	Without	With	Without	With	Without	With
Dimensions:	L 270 x D 35 x H 54 mm	L 280 x D 50 x H 58 mm	L 370 x D 35 x H 54 mm	L 380 x D 50 x H 58 mm	L 520 x D 35 x H 54 mm	L 530 x D 50 x H 58 mm
Material:	304L stainless steel - Epoxy fibre handle					
Weight:	60 g	240 g	70 g	250 g	90 g	270 g
Shield (optional):						
Weight:	635 g					
Composition:	Tungsten composite					
Radiation protection:	6 mm lead equivalence					
Package						
Package dimensions:	L 310 x D 220 x H 150 mm			L 100 x D 300 x H 270 mm		
Package weight (product without options):	1 kg					
Ref.:	02250030	00004700	02250041	02019910	02250050	02019915
Ref. model with handle and shield:	00004938		00003758		00003759	

MEDI HANDLING TONGS

MULTI-PURPOSE HANDLING TONGS

ALL **ENERGIES**

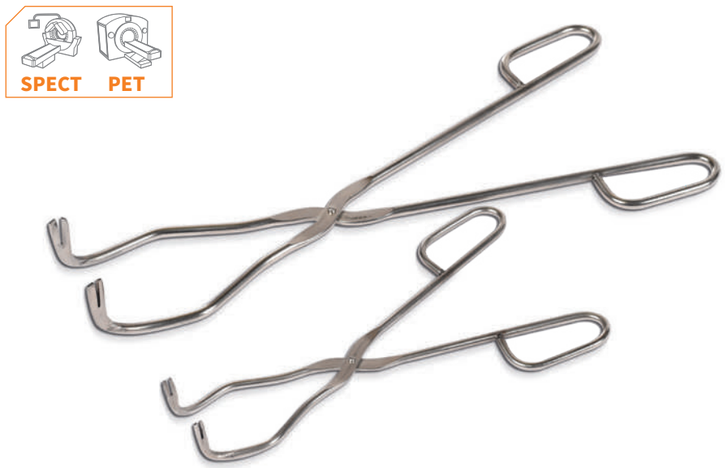

Medisystem handling tongs are the only **multi-purpose** tongs suitable for **handling/griping vials** as well as **syringes** and **compresses** during the preparation and fractionating of radiopharmaceutical drugs in **SPECT and PET** nuclear medicine, regardless of the radioisotope handled (^{99m}Tc, ^{201}Tl, ^{123}I, ^{177}Lu, ^{131}I, ^{18}F, ^{68}Ga, etc.). The curved tips on each arm of the **tongs make it easier to grip and hold** small objects or containers, such as syringes, needles, compresses, vials (all sizes) or any other accessory that must be remotely handled to reduce user exposure.
With two **different lengths** available, 250 or 400 mm, the tongs allow **remote handling for all operations** including elution, radiolabelling, measurement and sampling, regardless of the available work volume (large or small) and the environment of use: shielded hot cell, laminar flow hood, microbiological safety station, on a bench behind a shielded vision window, L-Block.
With a **full stainless steel design, daily** maintenance and **cleaning** as well as **decontamination** are simple and possible by immersion in a suitable bath. The Medisystem tongs are suitable for both right and left-handed people, without any special adjustment.
This versatile and robust tong model is the essential answer for daily remote handling operations in nuclear medicine for routine radiopharmaceutical preparations.

CHARACTERISTICS

General		
Tong length:	250 mm	400 mm
Dimensions:	L 85 x D 244 x H 21 mm	L 104 x D 385 x H 31 mm
Material:	Stainless steel	
Weight:	90 g	230 g
Package		
Package dimensions:	L 120 x D 420 x H 100 mm	
Package weight:	0,45 kg	
Ref.:	00034058	00034059

ASSOCIATED PRODUCTS

- PFE/PME/PHE vial shields
- Medi 24 vial shield
- Cont'Elu elution pots

Download the product data sheet at lemerpax.com

CONT'ELU ELUTION POTS

SHIELDED POTS FOR ELUTION

LOW & MEDIUM **ENERGY**

SPECT

ASSOCIATED PRODUCTS

- Medi handling tongs
- Positong handling tongs
- Mediclic syringe shields
- Easyview syringe shields

Download
the product data sheet
at lemerpax.com

The Cont'Elu shielded pot is the **essential accessory** specifically designed to perform **^{99}Mo/^{99m}Tc** radiopharmaceutical generator elutions and to collect the injectable sodium pertechnetate (^{99m}Tc) stock solution essential for the radiolabelling of many kits, necessary for the performance of common **scintigraphic examinations** in conventional nuclear medicine or SPECT.
The Cont'Elu range is **compatible with all models of generators** on the market, and is available in several references with a "viewing window" or **"full view"** to correspond to all service applications and to allow **visual control of the vial** and its contents concerning the **identification of the solution**, its **volume** and its **appearance** throughout its use.

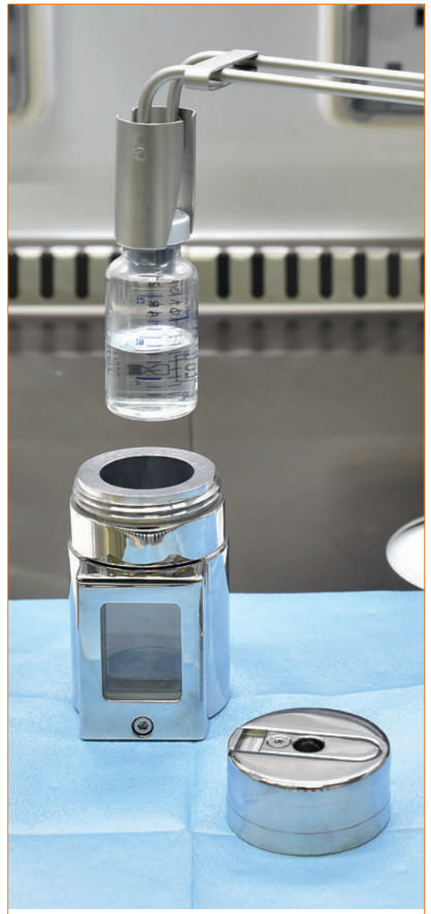

This **light weight** (less than 1 kg) and **compact-sized** Cont'Elu pot can also be used as a conventional vial shield for various daily radiopharmaceutical preparations.

FOCUS

In terms of **radiation protection,** the **Cont'Elu's structure** is made up of a combination of two types of shielding: **6 mm lead** and **14 mm lead glass,** which provides more than 99 % attenuation of the 140 KeV gamma radiation from ^{99m}Tc. The "full view" models are equipped with cylinders made entirely of **high-density** lead glass 5.2, guaranteeing a **360° view** of the vial and its contents and **maximum protection**.

The Cont'Elu shielded pot is equipped with a **sealed closing system**, and **secured** with a screw-on **shielded cap** fitted with a **sliding bar** with a lead disc, which locks access to the radiopharmaceutical vial and prevents any risk of leakage and contamination in the event of a spill.

The Cont'Elu is **durable and very resistant**, and covered with 316L stainless steel with a mirror-polished finish to allow **easy maintenance** and **decontamination,** including by immersion.
A special feature has been developed with the Zevalin Cont'Elu, which features a specific adapter to match the ^{90}Y-labelled radiopharmaceutical vial, allowing it to be positioned correctly and thus facilitating sampling. The particularly elongated body of this shielded pot allows full visibility of the vial and its contents with its integral laminated lead glass construction, for enhanced safety.

Radiation protection:

Radionuclides	% of attenuation
^{99m}Tc	99,99 %
^{111}In	99,53 %
^{201}Tl	99,99 %
^{177}Lu	99,89 %

CHARACTERISTICS

General	Cont'Elu Full view Ultra Technekow™ FM compatible	Cont'Elu Full view Tekcis® compatible	Cont'Elu Full view - Lying down Zevalin vial compatible	Cont'Elu with viewing window Tekcis® compatible
External dimensions:	Ø 59,5 x H 75,6 mm	Ø 59,5 x H 80 mm	Ø 59,5 x H 80 mm	Ø 54.25 at max. width x H 84.5 mm
Internal dimensions:	Ø 26,5 x H 50,1 mm			
Material:	Structure 316 L stainless steel			
Height of lead glass cylinder:	34,5 mm	34,5 mm	47,9 mm	N/A
Dim. of lead glass window:	Ø 54,5 x H 32 mm	Ø 54,5 x H 32 mm	Ø 54,5 x H 45,5 mm	L 22 x H 30 mm
Radiation protection:	6 mm lead / 14 mm lead glass			6 mm lead / 12 mm lead glass
Lead glass density:	5,2			
Weight:	0,96 kg	0,92 kg	0,94 kg	0,97 kg
Complement:			Delivered with Zevalin vial adapter ID: 16.5 x H 36 mm	
Package				
Package dimensions:	L 70 x D 70 x H 100 mm			
Package weight:	1,2 kg			
Ref.:	00025868	00005265	00025809	00005264
Ref. spare kit - lead glass:	00004283		00025801	00004279
Ref. spare kit - plug:	N/A	N/A	00022808	N/A

PFE/PME/PHE
VIAL SHIELDS

LEAD GLASS VIAL SHIELD

ALL **ENERGIES**

ASSOCIATED PRODUCTS

- PDA support
- Mediclic syringe shields
- Easyview syringe shields
- Easyqueeze syringe shields
- Medi handling tongs
- Positong tongs

The PFE/PME/PHE range of lead glass vial shields is **suitable for a wide range** of low, medium and high activity radiopharmaceutical **vials** for low and medium energy gamma emitting radionuclides (^{99m}Tc, ^{111}In, ^{201}Tl, ^{177}Lu, etc.) and offers operators a radiation protection and ergonomic solution for **storing radioactive liquid preparations** in nuclear medicine, mainly for **SPECT** activity. The PHE model also guarantees an attenuation of more than 99 % when handling high energy radioisotopes such as ^{131}I, ^{18}F, ^{68}Ga.
Offering **unprecedented visual comfort** with its **integral** design in high-density **lead glass** (5.2), it allows a **full 360° view** of the radioactive solutions stored inside as well as **protection of hands and fingers** for daily handling operations. This means that the operator knows the available volume of radiopharmaceutical solution at all times, as well as the identification data of the preparation (volume, activity, batch number, name, radioisotope), thus eliminating any risk of error.
This range of vial shields meets the highest regulatory standards and is approved for sale on the US market.

The innovative design of the lid and its fixing system with 2 O-rings guarantees **secure sealing** of the vial shields. A removable cap, also fitted with an O-ring, allows the preparation to be completely isolated when not in use and prevents leakage.

FOCUS

Positioning and holding of the vial are possible and **secure** with the supply of a wide range of **adaptors** of different thicknesses from 3.5 to 25 mm delivered with the product. The vial is perfectly **stable** and at the right height for **safe sampling**, regardless of its size.
The Delrin® material used for the adaptors is extremely light, recyclable and perfectly decontaminable by immersion and soaking in suitable baths.

For an even more ergonomic design, the 3 vial shields can be positioned for in the PDA vial shield supports exclusively designed and distributed by the Lemer Pax & Medisystem group.

CHARACTERISTICS

General	PFE	PME	PHE
External dimensions:	Ø 57 x H 115 mm	Ø 67 x H 115 mm	Ø 86 x H 115 mm
Internal dimensions:	Ø 31 x H 62 mm		
Material	316L stainless steel		
Lead glass thickness:	10 mm	15 mm	24,5 mm
Lead glass density:	5,2		
Radiation protection:	Bottom: 8 mm lead Top: 12 mm tungsten Sides: 10 mm lead glass	Bottom: 8 mm lead Top: 12 mm tungsten Sides: 15 mm lead glass	Bottom: 8 mm lead Top: 12 mm tungsten Sides: 24.5 mm lead glass
Locking system:	Lid + Cap 316l stainless steel / lead and tungsten - Closing system with O-rings		
Adaptors:	Delrin® / Thickness: 3.5 mm - 5 mm - 6,5 mm - 11,5 mm - 25 mm		
Weight:	1,34 kg	1,8 kg	2,9 kg
Package			
Package dimensions:	L 210 x D 150 x H 150 mm		L 320 x D 240 x H 170 mm
Package weight (product without options):	1,5 kg	2 kg	3,5 kg
Ref.:	**02250010**	**02250011**	**02250012**

Radiation protection	PFE	PME
Maximum radioactivity that can be handled to obtain a dose rate less than 25 µSv/h at 5 cm from the walls*		
Radionuclides	**Maximum radioactivity that can be handled**	
^{99m}Tc	7,56.10^{4} TBq	7,07.10^{9} TBq
^{123}I	132 MBq	307 MBq
^{111}In	2,81 GBq	129 GBq
^{201}Tl	1,55.10^{4} TBq	1,04.10^{9} TBq
^{177}Lu	23,3 GBq	185 GBq

Radiation protection	PHE
Radionuclides	**% of attenuation**
^{18}F	99,40 %
^{131}I	99,65 %
^{68}Ga	99,14 %

Download
the product data sheet
at lemerpax.com

*Regulations in ASN Guide No.32 "In vivo nuclear medicine facilities: minimum technical rules for design, operation and maintenance"

MEDI 24
VIAL SHIELD

LEAD GLASS VIAL SHIELD

LOW & MEDIUM **ENERGY**

SPECT

ASSOCIATED PRODUCTS

- PDA support
- Mediclic syringe shields
- Easyview syringe shields
- Easyqueeze syringe shields
- Medi handling tongs
- Positong handling tongs

Download
the product data sheet
at lemerpax.com

This vial shield is designed for the **storage of radioactive solutions** contained in 2, 10 or 30 mL vials, and is **easy to use** with **maximum protection** (99.99 % attenuation for ^{99m}Tc). It allows easy syringe sampling of **SPECT** radiopharmaceuticals while limiting user exposure. The internal diameter of the vial shield can be modified with the plexiglass adapters allowing to perfectly secure and centre the vials.
This model is made entirely of high-density lead glass for improved visibility and easy maintenance.
This vial shield meets the highest regulatory standards and is approved for sale on the US market.

FOCUS

It consists of a lead glass cylinder (density 5.2) which is closed at the top by a threaded lid with a conical lead cap. This port gives access to the septum of the vial and allows the solution to be withdrawn using a syringe fitted with a hypodermic needle.
The robust stainless steel outer structure ensures that the lead glass cylinder is protected during handling. The inner diameter of the vial shield can be adjusted with plexiglass adapters (beta protection) to allow the use of 2 and 10 mL vials.
A specific adapter can be supplied on request for the 30 mL vials (PMMA extension of 6 mm thickness and 36 mm external diameter) for the administration of certain therapies, mainly using ^{177}Lu.

CHARACTERISTICS

General

External dimensions: Ø 80 x H 103 mm

Internal dimensions: Ø 37 x H 68 mm

Material: 304 L stainless steel

Lead glass thickness: 21,5 mm

Lead glass density: 5,2 g/cm^3

Complementary shielding:
upper disc 8 mm lead
lower disc 10 mm lead

Weight: 2,45 kg

Locking system (in 316L stainless steel - lead and tungsten)**:**
Threaded lid + conical plug

Adaptors (in plexiglass)**:** To centre and raise the vials

Sizes:
2 mL bottle - 10 mL bottle - 30 mL bottle

Radiation protection:

Radionuclides	% of attenuation
^{99m}Tc	99,99 %
^{111}In	99,66 %
^{201}Tl	99,99 %
^{177}Lu	99,93 %

Package

Package dimensions: L 140 x D 140 x H 180 mm

Package weight: 3,6 kg

Ref.: 00017518

EXPOSURE
REDUCING COVER

RANGE OF SHIELDED LIDS FOR MULTI-DOSE RADIOPHARMACEUTICAL POTS

HIGH **ENERGY**

PET

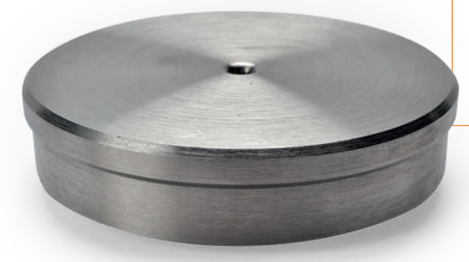

ASSOCIATED PRODUCTS

- Posisafe® Pb30 type A
- Posisafe® W type A
- Medi handling tongs
- Positong handling tongs

Download
the product data sheet
at lemerpax.com

The range of exposure reduction covers has been specifically developed for **PET activity**, to provide **additional hand and finger protection** for users during **manual sampling** of **high-energy** radiopharmaceuticals, in a shielded hot cell or on a benchtop behind protective shields. They are **robust** and made entirely of **tungsten** (20 mm), and very **easy** to use and clean.
With this accessory, a **significant reduction of more than 98 % in hand exposure** can be observed when sampling **^{18}F-FDG** or other **fluorinated radiopharmaceuticals**, and also for **Gallium-68** labelled radiopharmaceuticals.
They can also be used for **Iodine 131** sampling **with 99.42 % attenuation**.
Once the radiopharmaceutical pot is placed in the shielded hot cell, the exposure reducer is installed in place of the radiopharmaceutical supplier's pot cover. With its integrated centring cone, it fits perfectly on the pot and automatically adjusts to the vial. The sample can then be safely drawn up with a syringe equipped with a LP needle, for example.
They can be adapted to radiopharmaceutical transport pots, and are compatible with many brands such as Curium, AAA, Comecer, Lemer Pax.

CHARACTERISTICS

General	Curium pot compatible	AAA pot compatible	Cyclopharma pot compatible	Comecer pot compatible
External dimensions:	Ø 95 x H 25 mm		Ø 93 x H 21,5mm	Ø 95 x H 25mm
Diameter for needle passage:	Ø 5 mm			
Material:	Tungsten			
Tungsten thickness:	20 mm			
Weight:	2,75 kg	2,74 kg	2,33 kg	2,58 kg
Radiation protection:				
Radionuclides / % of attenuation	**^{18}F** / 98,86 % - **^{68}Ga** / 98,56 % - **^{131}I** / 99,42 %			
Package				
Package dimensions:	L 140 x D 140 x H 180 mm			
Package weight:	3,6 kg			
Ref.:	00032624	00032918	00032919	00039289

OUR VISION FOR DESIGN

The **Scintidose dose calibrator** was designed to provide **reliability** and **safety** for both patients and users. The choice of materials, the **precision of the electrometer** and the **guarantee of a long-lasting leak-free seal,** have made it possible to achieve this high- performance objective.

The user-friendly and intuitive LPDose application provides users with safe and comfortable daily working conditions.

SCINTIDOSE DOSE CALIBRATOR

MEASURING DEVICE FOR LOW, MEDIUM AND HIGH ACTIVITIES

ALL **ENERGIES**

5.6.

The Scintidose dose calibrator is a **measuring device** designed for the measurement of radioisotope activities of **all energies**. It can be integrated into manual and automatic preparation equipment such as shielded hot cells, benchtops or L-Block with an adaptable sample dipper and removable lining. Its **very broad energy range from 25 KeV to 3 MeV**, as well as its **theoretical measurement range from 4 kBq to 4 TBq (for ^{18}F),** allow for **extensive use** in **SPECT** and **PET** activities. **The 3 mm lead shield built into** the ionisation chamber for the standard model ensures that background noise is kept to a minimum.

The LPDose software supplied with the dose calibrator, features all the necessary functionalities and i**s easy to use for precise and accurate applications**. It mainly allows for **regulatory quality control, calibration of multiple radioisotopes, dose measurement** according to their packaging and **synchronisation with radiopharmacy software for improved traceability**.

FOCUS

[1] The very high sensitivity (I ≥ 15fA) **shielded ionisation chamber** incorporates an electrometer which allows the measurement and digitisation of the amount of current received. It is also equipped with a removable protective liner placed inside the detector to prevent accidental contamination.

The **isosensitivity zone** is 7 cm for the Standard version. The Scintidose dose calibrator is also available in a 2/3 chamber version [5] when embedded in equipment such as the Posijet® preparation and injection unit and the Easypet shielded hot cell. In this case, a volume calibration algorithm also ensures measurement accuracy beyond the 3.5 cm isosensitivity zone.

5.7.

[2] The **sample dipper** made of natural POM can hold syringes and vials. It is compatible with the optional "Posilift" foot-operated pneumatic raising and lowering system, for a significant reduction in exposure to users' hands and fingers.

[3] The integrated **Posibox computer** allows to run the LPDose user interface. It is equipped with the necessary safety features for integration into a hospital network.

[4] The **LPDose application** is configurable according to isotope requirements. The **diversity of the menus** and the display have been designed to provide the user with a **simple** and **functional** device.
In order to guarantee **full and secure traceability** of information concerning the radiopharmaceuticals, Lemer Pax proposes **a configurable interface between the LPDose application and the radiopharmacy software** used by the service. This connection enables the exchange of radiopharmaceutical stock solutions, patient appointments or worklists, **real-time measurements** and prepared doses between the two systems. Software compatible with this **two-way communication interface** includes: Venus (Nicesoft), PharmaManager (Softway Medical), Gera (Thélème) and Xplore (EDL).

[6] The **Dymo 550 printer** is fully compatible with the LPDose application and the label content can be configured to the users' needs.

REGULATORY FRAMEWORK

The Scintidose dose calibrator meets the requirements of **EU regulation 2017/745** as a **Class I medical device** for the measurement function. Electromedical device, compliant with **EN 60601-1:2006 (+ A1/2013)** for general safety requirements, **EN 60601-1-2:2015** for electromagnetic compatibility, **EN 60601-1-6:2010 (+ A1/2015) and EN 62366: 2015 (+ A1/2020)** for application of usability engineering to medical devices. The control software for the LPDose dose calibrator meets the requirements of **EN 62304:2006 (+ A1/2018)** for the software life cycle process.

This software features inspection functions regulated by the **French decree of 25 November 2008 and international standard IEC 61948-4.**

Calibration and Presetting:
A factory calibration of ^{99m}Tc, ^{201}Tl, ^{67}Ga, ^{111}In, ^{123}I, ^{18}F radioisotopes for BD plastipak 2 mL syringe packs and for CIS bio vials is built into the software by default. The Scintidose dose calibrator can also be calibrated on site by the Medical Physics Department of the hospital. Calibration by a certified body can be carried out in accordance with the requirements of the **COFRAC ISO 17025 accreditation standard** as an option.

CHARACTERISTICS

General

External dimensions: Ø 200 x H 427 mm

Inner Ø: 46,5 mm

Possible Ø of the sample: 40 mm

Weight: 20,5 kg

Standard equipment:
Standard ionisation chamber
Posibox
Standard LCD screen
Wireless keyboard + mouse
Dymo label printer

Measurable energy range:
25 KeV to 3 MeV

Measurement stability: ≥ 99%

Measurement accuracy: ≥ 95%

Filling gas: argon (99%)

Operating temperature:
10°C to 45°C

Linearity: < 5 % (over the operating range of the dose calibrator)

Overall accuracy: +/- 2%

Response time: 1 to 7 s

Isosensitivity zone at 2 %:
Total height 70 mm

Theoretical measurement range
4 kBq - 4 000 GBq (^{99m}Tc)
2 kBq - 2 000 GBq (^{18}F) 5.6.1.

Repeatability (relative standard deviation/mean): ≤ ± 0,2%

Reproducibility (relative standard deviation/mean): ≤ ± 1%

Shielding: 3 mm of lead

Computer platform

Posibox computer:
Intel® Celeron® J1900 Quad Core 2.0 GHz
RAM 4GB
100 V ~ 240 V / 50 ~ 60 Hz
Medical power supply 60601-1-2

Connectivity: 4 COM ports / 5 USB 2.0 ports / 1 USB 3.0 port / 2 Ethernet 10-100 ports / VGA Out / HDMI Out / Audio Line-out, Mic-in, Line-in

Operating system: Windows 10

Package

Package dimensions: L 780 x D 480 x H 680 mm

Package weight (product without options): 60 kg

Download
the product data sheet
at lemerpax.com

EFFECTIVE DIMENSIONS (mm)

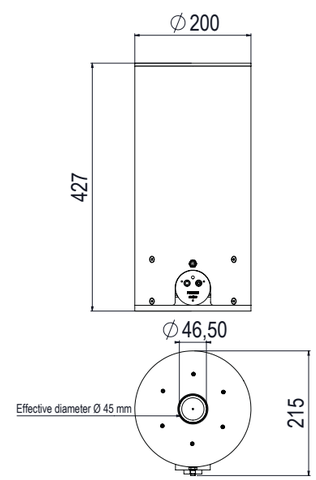

Ref.:	
00031601_CA_SA	SCINTIDOSE STD dose calibrator - Calibrated - Std screen -AZERTY
00031601_CA_SQ	SCINTIDOSE STD dose calibrator - Calibrated - Std screen -QWERTY
00031601_CA_SS	SCINTIDOSE STD dose calibrator - Calibrated - Std screen - SPANISH
00031601_CA_TA	SCINTIDOSE STD dose calibrator - Calibrated - Touchscreen -AZERTY
00031601_CA_TQ	SCINTIDOSE STD dose calibrator - Calibrated - Touchscreen -QWERTY
00031601_CAL	SCINTIDOSE STD chamber dose calibrator - Calibrated - without screen or keyboard
00031601_ET	SCINTIDOSE STD chamber dose calibrator - Adjusted - without screen or keyboard
00031601_ET_SA	SCINTIDOSE STD dose calibrator - Adjusted - Std screen -AZERTY
00031601_ET_SQ	SCINTIDOSE STD dose calibrator - Adjusted - Std screen -QWERTY
00031601_ET_TA	SCINTIDOSE STD dose calibrator - Adjusted - Touchscreen-AZERTY
00031601_ET_TQ	SCINTIDOSE STD dose calibrator - Adjusted - Touchscreen-QWERTY

LPDOSE APPLICATION

[1] The Main Menu of the LPDose application gives access to the Measurement, Quality Control, Utilities and Settings features [2] The Quality Control Menu includes the automation of the daily regulatory checks of the dose calibrator through a dedicated programme. [3] The Measurement Menu is mainly used by the operator when preparing and measuring radiopharmaceuticals. This menu also includes features optimising the work of users including: integrated decay calculation, subtractive measurement, user identification. The reliability and accuracy of the radioisotope measurement is ensured by the "reset" function, also present in the software, performed by the user before each measurement. [4] The Utilities Menu allows monitoring of ionisation chamber information and operating curves in real time as well as performing calibrations of new radioisotopes and constancy sources. [5-6] The web application accessible to Department Managers, Radiopharmacists, and Radiophysicists allows archiving and analysis of the history of stock solutions used, patient doses prepared, and regulatory quality control results.

Characteristics

Functions:
- Communication with the radiopharmacy software (RIS)
- Automatic isotope calibration
- Over 300 pre-programmed isotopes
- Shortcut to 7 isotopes/packages
- Automatic adaptation of the unit of measurement
- Display configurable in Curie and Becquerel
- Integrated quality controls
- Molybdenum and Filiation rate built-in specific tests
- Real-time graphs of dose calibrator data
- Customisable printing labels
- Possibility to connect 4 chambers on the same software
- Customisable user list
- Reliable and secure data recording
- Built-in web application to view production history and quality control results
- Multi-language application
- Recording of traces to facilitate fault location
- Multi-package management
- Management of preparations by patient appointment
- Built-in decay calculation tool
- Built-in subtractive measurement tool

Certifications:
Complies with EU regulation UE 2017/745
EN 60601-1:2006 (+ A1/2013)
EN 60601-1-2:2015
EN 60601-1-6:2010 (+ A1/2015)
EN 62366: 2015 (+ A1/2020)
EN 62304:2006 (+ A1/2018)
Complies with the French decree of 25 November 2008
Complies with international standard IEC 61948-4
Complies with EU regulation 2016/679 (GDPR)

Options

Radiopharmacy software connection

COFRAC calibration service on request (ISO 17025)

Touchscreen 15 inches

Posilift automatic and pneumatic system for raising and lower the sample dipper by foot control

Voice control allows to control the measuring device by voice (selection of the stock solution, of the patient, of the isotope, of the conditioning, record a dose, print a label, etc.).

MEDI 405
DOSE CALIBRATOR

COMPUTERISED DOSE MEASUREMENT DEVICE

ALL **ENERGIES**

Download
the product data sheet
at lemerpax.com

The Medi 405 dose calibrator is a **measuring device** for the **control of radioisotope activity** for **SPECT** and **PET** applications, both for the **measurement of stock** solution **vials** and for the measurement of patient doses to be administered, packaged in **syringes of multiple capacities**. Its measurement range from **1 MBq to 200 GBq** (^{99m}Tc) and its energy range from **25 keV to 3 MeV** allow a wide range of applications for this dose calibrator. It can be **positioned on a benchtop** or integrated into **low, medium and high energy shielded hot cells**. Its **reliability** is proven and recognised with its **long-lasting** resistant ionisation chamber. It features a **large chamber** to facilitate the insertion of all types of containers (vials and syringes) up to a diameter of 48 mm. The integrated control software, accessible via a 24" touch screen, ensures an ergonomic working environment for users. The **interface is easy to use** and allows to perform: **regulatory quality controls, add** and **calibrate** additional **radioisotopes** as required, and **measure** radiopharmaceutical **preparations and doses.** The **compatibility** of the Medi 405 dose calibrator with **radiopharmacy software** (Softway Medical, Thélème and Nicesoft) increases **security** and allows to ensure the **traceability** of the measurements.

REGULATORY FRAMEWORK

The Medi 405 dose calibrator meets the requirements of **EU regulation 2017/745** as a **Class I medical device** for the measurement function. Electromedical device, compliant with **EN 60601-1:2006 (+ A1/2013)** for general safety requirements, **EN 60601-1-2:2015** for electromagnetic compatibility, **EN 60601-1-6:2010 (+ A1/2015) and EN 62366: 2015 (+ A1/2020)** for application of usability engineering to medical devices. This software features inspection functions regulated by the **French decree of 25 November 2008 and international standard IEC 61948-4.**

Calibration and Presetting: A calibration factor determination procedure is available and allows the Medical Physics Department of the hospital to easily calibrate more than 50 radioisotopes. Calibration by a certified body can be carried out in accordance with the requirements of the **COFRAC ISO 17025 accreditation standard** as an option.

FOCUS

[1] **The ionisation chamber**, shielded with 3 mm of lead, incorporates an electrometer which quickly and reliably digitises the measured activity value. Its 8 cm isosensitivity zone ensures stability of sample measurement depending on its conditioning. Its response time of only 2 seconds for 95 % of the result allows for significantly high measuring speed.

[2] **A mouse and keyboard** are provided to allow easy remote control of the dose calibrator, in addition to the touch screen.

[3] **The large 24" touch screen** allows to display two simultaneous applications in order to quickly navigate between the dose calibrator and the facility's radiopharmacy software. The software for the management of the dose calibrator integrates all the necessary features for secure daily activities.

[4] **The sample dipper** can accommodate containers up to 48 mm in diameter. Two clear PVC protective liners are supplied with the dose calibrator to manage any accidental contamination.

[5] **A Smart Label 430 printer** is compatible with the Medi 405 management software to print identification labels for radiopharmaceutical solutions on vials and syringes.

[6] As an option, **the sample dipper raising and lowering system** can be integrated with the Medi 405 dose calibrator to automate the movement of the dipper with a foot control, thus reducing radiation to the user's hands and fingers.

EFFECTIVE DIMENSIONS (mm)

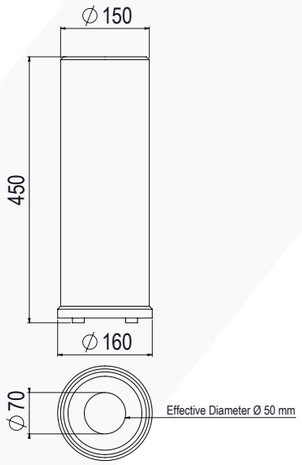

CHARACTERISTICS

General
External dimensions: Ø 150 x H 450 mm
Inner Ø: Ø 70 mm
Possible Ø of the sample: 48 mm max.
Weight: 15,5 kg
Standard equipment: 24 inch touch LCD screen Wireless keyboard/mouse
Measurable energy range: 25 KeV to 3 MeV
Measurement stability: ≥ 99%
Measurement accuracy: ≥ 95%
Filling gas: Argon (14 bar abs.)
Linearity: ± 1 % between 1 MBq and 200 Gbq (^{99m}Tc)
Overall accuracy: ± 3 % depending on the calibration source and geometric variations
Response time: max. 2 seconds for 95 % of the result
Isosensitivity zone at 2 %: 8 cm
Reproducibility (relative standard deviation/mean): ± 1 % at 24 hours (stable conditions)
Radiation protection: 3 mm of lead
Computer platform
Mini-PC: Intel® Atom® 1.6 GHz processor 2 GB RAM 105 W / 100 V ~ 240 V / 50 ~ 60 Hz
Connectivity: 2 COM ports / TV-Out / 4 USB 2.0 ports / Ethernet 10/100 / VGA Out
Interface : Standard RS-232C interface
Operating system: Windows 10
Package
Package dimensions: L 600 x D 700 x H 800 mm
Package weight (product without options): 28 kg
Ref.: 00034060

Software functions
Communication with the radiopharmacy software (RIS): Nicesoft, Thélème, Softway Medical
Pre-programmed radioisotopes: 10
Shortcut to radioisotopes: Yes and customisable list
Automatic adaptation of the unit of measurement: Automatic
Configurable display: Curie, Becquerel
Quality controls: All regulatory controls are built into the software
Printing labels: Printing of labels for vials and syringes in the appropriate format
Data recording: Data management in a database with secure access
Multi-language application: French, English, etc.
Management of preparations: Preparations managed either by appointment or by single measure
Gain / Bias correction / Zero setting / Calibration: Digital setting
Subtraction of background noise / Ionisation chamber battery test: Digital control
Certifications: Complies with EU regulation UE 2017/745 EN 60601-1:2006 (+ A1/2013) EN 60601-1-2:2015 EN 60601-1-6:2010 (+ A1/2015) EN 62366: 2015 (+ A1/2020) Complies with the French decree of 25 November 2008 Complies with international standard IEC 61948-4 COFRAC calibration service on request (ISO 17025)

POSISAFE® TYPE A

SHIELDED TRANSPORT AND STORAGE CONTAINERS FOR RADIOACTIVE SOURCES

ALL **ENERGIES**

SPECT **PET**

Posisafe® Pb30

Posisafe® W30

Download
the product data sheet
at lemerpax.com

REGULATORY COMPLIANCE - TYPE A PACKAGES:

Lemer Pax provides empty packaging that has undergone the qualification tests for Type A packages in accordance with IAEA Safety Standard - Regulations for the Safe Transport of Radioactive Material (2018 Edition). The Type A package provides containment during the transport phase of radioactive materials to protect people and the environment from contamination and exposure to radiation from radioisotopes:
- UN 2915: Radioactive material, Type A package non-special form, non-fissile or fissile-excepted.
- UN 2910: Radioactive material, excepted package-limited quantity of material.
- UN 2908: Radioactive material, excepted package-empty packaging.
- UN 3322: Radioactive material, low specific activity (LSA-III) non-fissile or fissile excepted. The radiation protection consists of 30 mm of lead equivalence in order to obtain a uniform surface exposure rate in compliance with the IAEA Safety Standard during all phases of transport. The radioactive materials placed in the Type A package are calculated by the user of the packaging in accordance with IAEA Safety Standard - Regulations for the Safe Transport of Radioactive Material (2018 Edition).

IAEA - No. SSR-6 (2018) Regulations for the Safe Transport of Radioactive Material. Definition of Exclusive Transport: § 221 Non-exclusive shipment by rail or road: § 573

Radioactive sources can be safely contained in Lemer Pax **shielded transport and storage containers** during **transfer** and **storage** to protect operators and the environment from contamination and exposure to alpha, beta, gamma and neutron radiation.
These shielded containers are **approved as Type A packages with overpack** (UN 2915 and UN 2908) for radioactive materials other than special forms, non-fissile or fissile excepted, regardless of the mode of transport: road, air, sea and rail.

CHARACTERISTICS

Container name	Posisafe® W20	Posisafe® W30	Posisafe® Pb30
Inner dimensions:	Ø 33 x H 65 mm		
Outer dimensions of the container:	L 98 x H 196 mm	L 118 x H 206 mm	L 115 x H 188 mm
Radiation protection:	20 mm tungsten	30 mm tungsten	30 mm lead under stainless steel inner and outer casing
Weight of container only:	8 kg	14 kg	10,5 kg
Ref. container only:	00017444	00005206	00027610

Type A package with overpack of 220 (overpack + container)			
Outer dimensions of overpack:	L 220 x D 220 x H 305 mm		
Weight of the entire package:	12 kg	18 kg	14,5 kg
Complete package ref.:	00029568	00029569	00028672

Type A package with overpack of 360 (overpack + container)			
Outer dimensions of overpack:	L 360 x D 360 x H 370 mm		
Weight of the entire package:	13 kg	19 kg	15,5 kg
Complete package ref.:	00029873	00019632	00029010

FOCUS

The wide range of Posisafe® products is available in several container models: in 20 mm tungsten "Posisafe® W20" and 30 mm "Posisafe® W30" or in 30 mm lead with "Posisafe® Pb30". Thus a wide choice is possible in order to guarantee the radiation protection adapted to the radioisotope considered.

Radiation protection is improved with the two overpack models proposed, increasing the distance factor to the source during package handling operations.
The integrity of the transported radioactive source is guaranteed with the fireproof holding and stability foam absorbing potential shocks of the container with a temperature resistance from -40°C to +70°C.
The safety and ergonomics of the Posisafe® are ensured by a large locking handle screwed on each model as well as a lid with an O-ring, guaranteeing a tight containment of the transported source as well as a good grip and stability of the container.
The compatibility of each model with our Easypet type fractionating cabinets and our Posijet® preparation and injection unit, capable of receiving multi-dose vials of radiopharmaceuticals, makes it the essential multifunctional and multi-purpose container in nuclear medicine.

BENCHTOP

WORK SURFACE FOR LABORATORY AND RADIOPHARMACY

ALL **ENERGIES**

SPECT **PET**

Download
the product data sheet
at lemerpax.com

In order to offer a **functional layout adapted to the constraints of the different services**, Lemer Pax has developed **shielded** and **non-shielded benchtops** made of various **robust materials** with **chemical and mechanical resistance** functional specificities **for all** user **applications**. The smooth surfaces of the materials offered: resin, reinforced polyester and composite, allow for simple and quick maintenance and radioactive and biological decontamination.

These ultra-resistant shielded benches are composed of a painted steel frame, with a 15 mm lead shielded worktop, a de-contaminable composite coating, as well as shielded edges of 30 mm of lead on the front and the back. The shielded screen consists of 64 mm thick laminated lead glass, inclined at 45° for an optimal ergonomic working position, and is mounted on full-length double slide bars to ensure user safety and effortless screen mobility.

CHARACTERISTICS

Shielded bench				
Standard dimensions:	L 1 000 x D 805 x H 1 494 mm	L 1 500 x D 805 x H 1 494 mm	L 2 000 x D 805 x H 1494 mm	L 2 500 x D 805 x H 1 494 mm
Materials:	Work surface decontaminable composite RAL 9010 painted steel frame Lead glass + 304L stainless steel			
Effective dimensions of the viewing window:	L 360 x D 360 x Th. 64 mm			
Viewing window angle:	45°			
Radiation protection:	Under the work surface: 15 mm lead On the front: 30 mm of lead			
Lead glass minimum density:	4,36			
Weight:	340 kg	470 kg	610 kg	750 kg
Ref.:	**PBEM 1000**	**PBEM 1500**	**PBEM 2000**	**PBEM 2500**

Lemer Pax produces **customised** layouts with the possibility of integrating utilities such as sinks, hot cells and storage cabinets, and then proceeds with the precise adjusting and installation of the benches.

Simple bench	
Standard dimensions:	L 1 900 x D 650 x H 900 mm
Materials:	Work surface resin or reinforced polyester
Weight:	60 kg
Ref.:	**00012052**

WALL **PASS-THROUGH**

SHIELDED TRANSFER PASS-THROUGH FOR RADIOACTIVE SOURCE

ALL **ENERGIES**

SPECT **PET**

ASSOCIATED PRODUCTS

- Easybox carrier
- Crocobox carrier

CHARACTERISTICS

General
External dimensions: L 625 x D 600 x H 750 mm
Internal dimensions: L 515 x D 550 x H 640 mm
Outfitting: Ext: Optional white or laminate finish from the Polyrey range Int: White finish Stainless steel range on request
Frame: leaded on one side and the colour of the window on the other
Radiation protection: 2 mm of lead
Options :
Customised shielding sizes and thicknesses
Oculus: protection window **L 150 x D 150 x Th. 8 mm** Ref. 00014744
Interlocking: mechanical or electrical Ref. 00014742/00014743
304L stainless steel interior reinforcement Ref. 00014745
Door seal Ref. 00014741
Overpressure with HEPA filter
Digicode
Packaging:
Package dimensions: L 700 x D 650 x H 900 mm
Weight: Contact us
Ref.: GTD02

Download
the product data sheet
at lemerpax.com

In order to **secure the transfer of radiopharmaceutical doses** from the preparation laboratory or the radiopharmacy to the administration rooms, Lemer Pax has developed the **double door shielded wall-pass-through** type GTD02, designed with a 2 mm lead shield and with standard dimensions L 625 x D 600 x H 750 mm. **Complete safety** is ensured by the option of **mechanical or electrical interlocking** of the doors which can be combined with the option of an "overpressure pass-through" equipped with a HEPA filter thus preventing any unwanted transfer of particles from one room to another when using the pass-through. The **"oculus"** option offers the user **permanent visual control** of patient sources or doses ready for use or administration, through a **lead glass window** integrated into the pass-through doors. The pass-through is **modular**, and other dimensions and shielding are also possible based on a feasibility study carried out by the Lemer Pax R&D team to adapt to all isotopes and their packaging and thus provide the **radiation protection adapted to your applications**.

VIEWING WINDOWS

LEAD GLASS VIEWING WINDOWS FOR CONTROL ROOMS AND LABORATORIES

ALL **ENERGIES**

SPECT **PET**

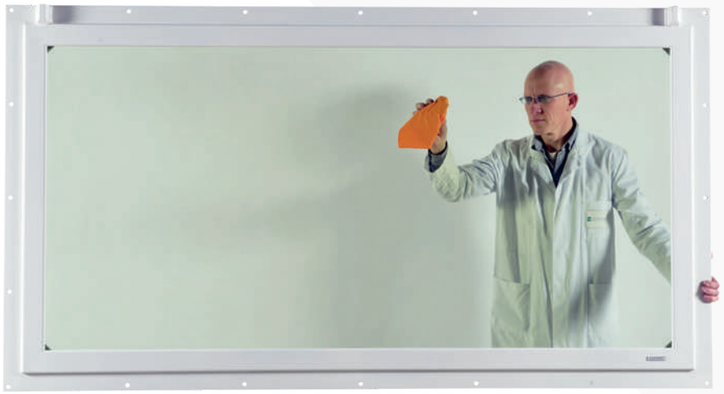

Download
the product data sheet
at lemerpax.com

Lead glass viewing windows are designed to provide users with a **combination of full visibility** and **adapted protection.** The thickness of the shielded frame and the size of the lead glass window are adapted to each type of installation, based on a study carried out by our design teams. With their **dimensions** and **customised shields, PET Scan View** and **Gamma Scan View** screens can be perfectly integrated into any premises in accordance with the requirements and applications of the different services. Whether in **PET** and **SPECT examination rooms**, thus ensuring safe **patient monitoring**, or in **laboratories** and **radiopharmacies, improving the comfort of users** on a daily basis by allowing light to enter rooms that are usually closed; user **radiation protection** takes **priority** with **shielding thicknesses that** can range from **2 to 12.5 mm** for **PET-CT rooms**, for example. In order to **increase robustness and to prevent oxidization**, it is also possible to produce these viewing windows in **laminated lead glass** (optional). A **very high level of security** can also be achieved with the **EI30** option, which allows the integration of these very large shielded screens into **fire walls or partitions**.

CHARACTERISTICS

General	Gamma View	PET Scan View		
Radiation protection in lead equivalence:	3 mm	5 mm	7,5 mm	12,5 mm
Total dimensions as standard:	L 1 600 x H 1 100 mm			
Frame size:	L 1 410 x H 910 mm			
Frame materials:	Standard red wood lead (from 2 mm to 6 mm) Optional aluminium or lead steel profile (from 2 mm to 12.5 mm)			
Lead glass dimensions:	L 1 348 x H 854 mm			
Lead glass minimum density:	4,36			
Weight:	105 kg	150 kg	220 kg	360 kg
Options				
	Laminated lead glass / Aluminium finish / EI30 firewall / Flush glass frame			
Ref.:	00029863	00029860	00029861	00029862

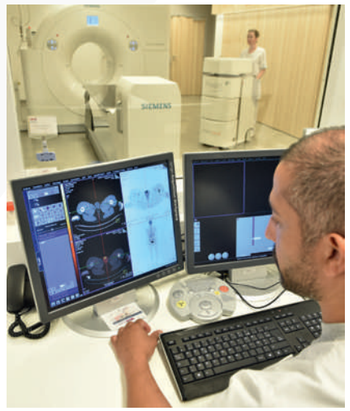

SAFEVIEW®

RADIATION PROTECTION VIEWING WINDOW

ALL **ENERGIES**

SPECT **PET** **ASEPSIS** PATENT PENDING

With **its exclusive technology, the Safeview®** radiation protection viewing window guarantees **full radiation protection** while offering **unprecedented transparency** for optimum **viewing comfort.** Safeview® is **patented** and guarantees the **aseptic** conditions and a **leakproof** seal.

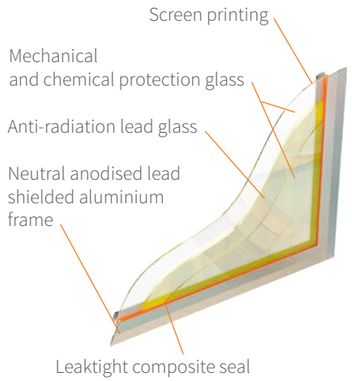

FOCUS

The **ultra-flat design, with no flexible seals or corners, allows easy and complete disinfection** of the entire window area. Its **laminated lead safety glass** is also **highly resistant to impact and scratches** and can be disinfected quickly and regularly without any degradation of its light transmission over time. The transparent Safeview viewing window providing radiation protection is the hygienic continuity of the new smooth surfaces used for the finish of aseptic rooms for radiopharmacies, laboratories and examination rooms. The Safeview® anti-radiation window is **available in 2 mm et 3 mm lead equivalence,** each in **3 dimensions**. Its **innovative attachment system** guarantees a totally **leakproof seal**. It is quick and easy to install, without the need for any specific tools.

Download
the product data sheet
at lemerpax.com

CHARACTERISTICS

General	Safeview® 1200*800		Safeview® 1200*1000		Safeview® 1800*1000	
Overall dimensions:	L 1 357 x H 957 mm		L 1 357 x H 1 157 mm		L 1 957 x H 1 157 mm	
Radiation protection:	2 mm Lead eq.	3 mm Lead eq.	2 mm Lead eq.	3 mm Lead eq.	2 mm Lead eq.	3 mm Lead eq.
Lead glass dimensions:	L 1 200 x H 800 mm		L 1 200 x H 1 000 mm		L 1 800 x H 1 000 mm	
Frame:	Neutral anodised aluminium frame with lead shielding					
Frame size:	L 1 227 x H 827 mm		L 1 227 x H 1 027 mm		L 1 827 x H 1 027 mm	
Lead glass minimum density:	4,36					
Weight:	80 kg	100 kg	100 kg	124 kg	144 kg	182 kg
Package						
Dimensions of the crate:	L 2 010 x D 130 x H 1 210 mm					
Gross weight (packed):	94 kg	114 kg	114 kg	138 kg	158 kg	196 kg
Ref.:	00039039	00037662	00037660	00037663	00037917	00037922

EXAMPLE OF THE GEORGES CHARPAK CENTRE IN QUIMPER

COMBINING RADIATION PROTECTION FOR PERSONNEL AND WELL-BEING FOR PATIENTS

THE CHALLENGE:

"ULTRA-SOPHISTICATED EQUIPMENT IN A REASSURING SETTING FOR HIGH QUALITY CARE"

The opening of the Georges Charpak centre in Quimper is the result of **collaboration and discussion between the medical teams and Lemer Pax Engineers, leading to a high level of quality, both as regards care of patients and the working conditions offered to employees.**

The aim of guaranteeing complete safety for the workers, while ensuring optimum comfort, was a major concern right from the start of the service design phase. For Doctor Georges-Philippe Fontaine – Group Director and GCS Administrator – guaranteeing his staff minimum exposure and keeping category B classification was absolutely vital. Ergonomics and prevention of musculoskeletal disorders were also priorities.
In addition, the safety of the patient, which is a major stake and structures the highly advanced quality policy in this team, was a decisive factor when choosing the equipment and the facilities.
Aesthetics are also extremely important in the overall understanding of the files by Doctor Fontaine.

SOLUTION:

LEMER PAX PRODUCTS COMBINE SAFETY, INNOVATION, TECHNICALITY AND A REFINED AND REASSURING DESIGN

INSTALLATION:

A DEDICATED SOLUTION ADAPTED TO EACH ACTIVITY

For the low and medium energy activity, the Easypharma Compact® Vision+ hot cell **was chosen for its excellent working comfort.** With its extra-wide fully glazed radiation-shielded door, operators have a perfect and complete view over the entire work surface, ensuring safer movements and less tiredness. **The possibility of working while sitting down also represents a real advantage in terms of daily working ergonomics.**

In the hot laboratory, the Easypharma HE cell was the latest addition to the radiation protection equipment. With its reduced footprint and pure design, it blends perfectly in the service's premises and thereby represents an alternative solution to the injection unit, as recommended by regulations. For the PET unit, the Posijet® preparation and injection unit **was chosen for its optimum technical performance, perfectly in line with the service's project and its cost optimisation ambition:** "in particular, it optimises the injected radiotracer doses for the benefit and safety of both patients and workers." (Source: GCS activity report). Its ability to integrate with the Venus software work list and its highly safe operation comply, in particular, with the requirements of the Georges Charpak Centre. The unit had to be able to cope with the increasing workload expected on the Quimper site while guaranteeing optimum radiation protection for the users. **The Posijet® motor was also a decisive feature since it makes the unit extremely easy to move around** and therefore protects radiographers against musculoskeletal disorders in their daily work.
The possibility of choosing the colour (grey) was also an advantage, allowing the product to blend in with the atmosphere of the premises.
For the team to become quickly familiar with our equipment and work independently, a team of Lemer Pax Engineers were available on site during theoretical and practical training sessions.
The dedicated Posijet® team also provided support during the first injections: a great source of reassurance during the roll-out phase, ensuring a safe deployment process which was much appreciated by the new users.

RESULTS

An increasing activity with stringent quality and safety requirements while guaranteeing the well-being and comfort of patients.

- Easier handling of the increasing workload
- Diversification of PET/CT examinations
- Quality and safety of patients optimised
- Safety and radiation protection of personnel preserved
- Comfort and ergonomics of personnel guaranteed
- Overall aesthetics of the premises highlighted by the choice of equipment

INJECTION

Syringe shield

MEDICLIC 108
EASYVIEW 110
EASYSQUEEZE 112
DRYING RACK FOR SYRINGE SHIELDS 113

Carrier cases

MEDI CARRIER 114
EASYBOX CARRIER 115
CROCOBOX CARRIER 116

Transport trolleys

MANUBOX 117
COMBINED TRANSPORT TROLLEY FOR MANUAL INJECTION 118
CHT 119

Protection shields

ALARA INJECTION SHIELD 120
BPP30 HV SHIELD 122

Injection units

MANUJET 124
MANUJET SHIELD 126
JETTI® 128
POSIJET® 132
EPIJET® 140

Layout of the premises

EXTRACTION SYSTEM 142
PMIP 143

MEDICLIC

RANGE OF TUNGSTEN SYRINGE SHIELDS FOR RADIOPHARMACEUTICAL SUBSTANCES

ALL **ENERGIES**

The Mediclic tungsten syringe shield **reduces exposure while allowing for ultra-fluid handling**, and is designed to reduce radiation to the user's hands and fingers during manual preparation and injection of radiopharmaceuticals. Mediclic shields which are provided in 2 and 5 mm tungsten thicknesses, guarantee radiation protection and compatibility with all isotopes handled in nuclear medicine, whether for SPECT or PET activities for low, medium and high energy, such as ^{99m}Tc, ^{111}In, ^{123}I, ^{177}Lu, ^{201}Tl, ^{131}I, ^{18}F, ^{68}Ga, etc.

The innovative and streamlined design of the Mediclic syringe shield offers an ergonomic grip that helps **operator dexterity** during direct IV administration of the radiopharmaceutical.

Connection to an IV cannula or other peripheral venous line is also possible under perfectly adapted aseptic and safe conditions.

The **"click" system** allows for easy positionning, insertion as well as simple and ultra fast removal of the syringe.

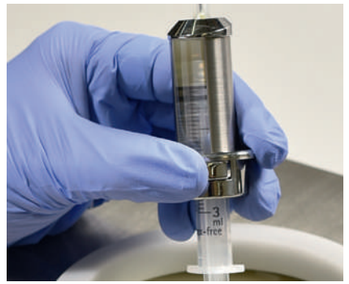

The wide range of references provides for a complete range adapted to a large number of disposable syringe models which can be used in the Nuclear Medicine department.

Safety and reliability are ensured by the large viewing window made of high-density lead glass with magnifying effect, which provides visual comfort both for monitoring the volume of the radiopharmaceutical during administration and for facilitating syringe preperation during administration and radiolabelling operations, reconstitution of cold kits and fractionating of radiopharmaceutical stock solutions.

ASSOCIATED PRODUCTS

- Crocobox carrier
- Easybox carrier
- PRA3/PRA10 needle bins
- PFE/PME/PHE vial shields

FOCUS

The tungsten structure of the Mediclic syringe shield body allows for an attenuation of more than 99 % for an activity of 740 MBq of ^{99m}Tc and 77 % for an activity of 300 MBq of ^{18}F. It guarantees optimum radiation protection conditions for the operators' hands aduring the various radiopharmaceutical manipulations.

Easy viewing: the large size of the radiation protected viewing window made of lead glass (density 5.2) combined with the internal Teflon sleeve, resistant to radiation and decontaminating products, allows to perfectly view the volume held in the syringe as well as all its graduations, and thus enable improved **working comfort** and unequalled visual precision.

The bevelled end of the syringe shield, made of 316L stainless steel, provides a secure view to check the connection between the syringe and the needle or 3-way valve. This special finish also ensures the robustness required when cleaning the syringe shield by immersion in desinfectant and decontaminant baths and prevents possible breakage and scratches of the lead glass.

The intelligent design of Mediclic allows the operator to easily clean the syringe shield by immersion or using a disinfectant wipe. This innovative design also allows, if necessary, quick replacement of the lead glass window by the operator in a matter of minutes. No adhesives or special technical operations are required.

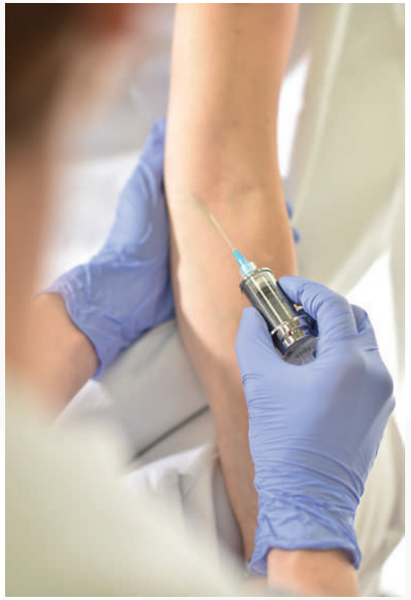

"CLICK" SYSTEM

The "click" system, composed of a 316L stainless steel pin and spring, allows to easily insert the syringe, **in the required position**. The operator can rotate the syringe as required and change the depth of insertion.

Once the position has been chosen, the "click" system secures the syringe in position, with no risk of moving while the radiopharmaceutical is being administered to the patient. Ensuring that the injection is safe and the operator is always protected.

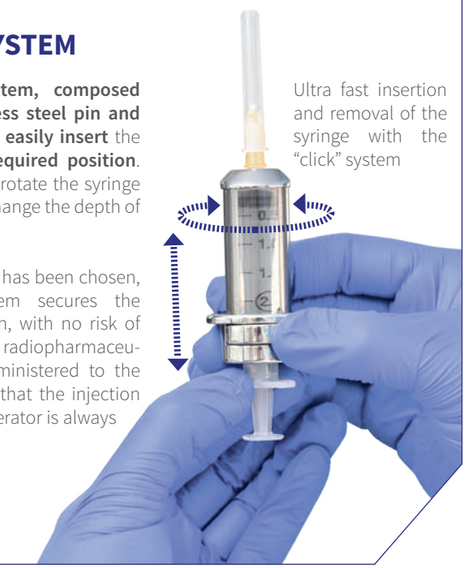

Ultra fast insertion and removal of the syringe with the "click" system

CHARACTERISTICS

General	1 mL short	1 mL long	2 mL	2 mL «BD Emerald»	2,5 mL	3 mL short	3 mL long	5 mL short	5 mL long	10 mL short	10 mL long
Size planned for the syringe:	70 mm	74 mm	52 mm	49 mm	58 mm	62 mm	68 mm	59 mm	62 mm	73 mm	82 mm
Component parts:	Tungsten body / 316L stainless steel profile tip / Teflon inner sleeve										
LOW & MEDIUM ENERGY											
Radiation protection:	2 mm tungsten / 6.25 mm lead glass (density 5.2)										
Ref.:	**00017507**	**00017506**	**00017509**	**00019790**	**00017508**	**00017515**	**00017514**	**00017511**	**00017510**	**00017513**	**00017512**
Weight:	0,12 kg	0,13 kg	0,11 kg	0,1 kg	0,12 kg	0,13 kg	0,14 kg	0,14 kg	0,16 kg	0,21 kg	0,23 kg
Ref. spare kit - lead glass:	**00005366**		**00005368**		**00004281**	**00008199**	**00007314**	**00008200**		**00020118**	**00007315**
HIGH ENERGY											
Radiation protection:	5 mm tungsten / 9.25 mm lead glass (density 5.2)										
Ref.:	**00013044**	**00013045**	**00013046**	**00034056**	**00013047**	**00013048**	**00013049**	**00013050**	**00013051**	**00013052**	**00013053**
Weight:	0,30 kg	0,31 kg	0,23 kg	0,23 kg	0,27 kg	0,29 kg	0,32 kg	0,34 kg	0,35 kg	0,47 kg	0,53 kg
Ref. spare kit - lead glass:	**00004280**		**00004282**		**00005367**	**00023643**	**00034035**	**00006335**		**00029619**	**00029620**
Package											
Package dimensions:	L 240 x D 180 x H 50 mm										
Package weight:	0.130 kg + weight of syringe shield										

Download the product data sheet at lemerpax.com

EASY**VIEW**

COMPLETE RANGE OF TUNGSTEN SYRINGE SHIELDS

ALL **ENERGIES**

ASSOCIATED PRODUCTS

- Crocobox carrier
- Easybox carrier
- PRA3/PRA10 needle bins
- Cont'Elu elution pots
- PFE/PME/PHE vial shields

Easyview syringe shields are available in a wide and complete range of sizes and shielding (from 2 to 7 mm of tungsten) to offer users an **ergonomic and protective solution** that is essential during the preparation, transfer and injection of **all-energy radio-pharmaceutical** doses for SPECT and PET activities. Regardless of the radioisotope to be handled: ^{99m}Tc, ^{111}In, ^{123}I, ^{177}Lu, ^{201}Tl, ^{131}I, ^{18}F, ^{68}Ga and the required administration method: direct injection to the patient, connection to a catheter or a 3-way valve, the **confortable hold** of this syringe shield allows for **dexterity, precision and speed of execution of the operation**, thus limiting contact time with the radioactive element to a minimum. This range of ergonomic syringe shields meets the highest regulatory standards and is approved for sale on the US market.

Download
the product data sheet
at lemerpax.com

LME CHARACTERISTICS

3.1

General	1 mL			2 mL		2,5 mL	3 mL	5 mL			10 mL			
Size planned for the syringe:	70 mm	75 mm	76 mm	50 mm	53 mm	59 mm	69 mm	57 mm	61 mm	64 mm	73 mm	75 mm	83 mm	85 mm
Component parts:	Tungsten body / 304 L stainless steel syringe holder / Lead glass window / PA 6.6 plastic lock													
	LOW & MEDIUM ENERGY													
Inner diameter:	9 mm	11,5 mm	9 mm	11,5 mm				15 mm			17,5 mm			
Weight:	0,12 kg	0,16 kg	0,13 kg	0,10 kg	0,11 kg	0,13 kg	0,15 kg	0,16 kg	0,17 kg	0,18 kg	0,27 kg	0,28 kg	0,31 kg	0,32 kg
3.1 Radiation protection:	2 mm tungsten 7.28 mm lead glass (density 5.2)	2 mm tungsten 7.5 mm lead glass (density 5.2)	2 mm tungsten 7.28 mm lead glass (density 5.2)	2 mm tungsten 7.5 mm lead glass (density 5.2)				2 mm tungsten 8 mm lead glass (density 5.2)			2 mm tungsten 8.7 mm lead glass (density 5.2)			
3.3. Ref.:	00021896	00022655	00022638	00021314	00022641	00021318	00022652	00022311	00022631	00022644	00021289	00022658	00022661	00027962
Ref. spare kit - lead glass:	00021899	00022657	00022640	00021316	00022643	00021321	00022654	00022310	00022633	00022646	00021292	00022660	00022663	00027964
Package														
Package dimensions:	L 130 x D 100 x H 50 mm													
Package weight:	0.2 kg + weight of syringe shield													

FOCUS

The **main part** of the **Easyview syringe shield** is made of a **tungsten barrel** (from 2 to 7 mm depending on the model) which has been **minutely worked** on to produce a **perfectly smooth** finish that gives greater confort and helps with the **cleaning and decontamination by immersion** or with adapted wipes.

The **attenuation** of **140 KeV gamma radiation from ^{99m}Tc is over 99.7 %** for 740 MBq activity and **86.95 % attenuation** for 300 MBq activity of ^{68}**Ga**.

Its **large shielded viewing window made of high density 5.2 lead glass** with **magnifying effect** allows for **improved viewing of the volume** held in the syringe and its **graduations in full**, to **facilitate precision sampling** and thus improve daily **working comfort**.

Engraved identification data indicating the **model and energy** (LME or HE) on the tungsten body of the Easyview makes it **easier to choose the syringe shield** to be used in accordance with the capacity of the syringe and the radioisotope used. The engraved data also facilitates inventory and ordering of accessories.

A black plastic **lock** (PA 6.6) **ensures that the syringe is secured** in the syringe shield and **secures its position** by preventing unwanted random movement. 3.2

The **ingenious design** of the Easyview allows the user to **change the leaded glass viewing window independently** by removing a single screw, if necessary, either for a simple replacement or for thorough cleaning and decontamination, but also when changing the plastic syringe lock with the **tool provided** (Torx key).

HE CHARACTERISTICS

General	1 mL			2 mL		2,5 mL	3 mL	5 mL			10 mL			
Size planned for the syringe:	70 mm	75 mm	76 mm	50 mm	53 mm	59 mm	69 mm	57 mm	61 mm	64 mm	73 mm	75 mm	83 mm	85 mm
Component parts:	Tungsten body / 304 L stainless steel syringe holder / Lead glass window / PA 6.6 plastic lock													
	HIGH ENERGY													
Inner diameter:	9 mm	11,5 mm	9 mm	11,5 mm				15 mm			18 mm			
Weight:	0,27 kg	0,35 kg	0,30 kg	0,20 kg	0,25 kg	0,28 kg	0,32 kg	0,30 kg	0,35 kg	0,37 kg	0,52 kg	0,53 kg	0,59 kg	0,61 kg
Radiation protection:	6 mm tungsten 7.28 mm lead glass (density 5.2)	6 mm tungsten 7.5 mm lead glass (density 5.2)	6 mm tungsten 7.28 mm lead glass (density 5.2)	6 mm tungsten 7.5 mm lead glass (density 5.2)				6.5 mm tungsten 8 mm lead glass (density 5.2)			7 mm tungsten 8.7 mm lead glass (density 5.2)			
Ref.:	00024946	00024953	00024947	00024948	00024949	00024950	00024952	00024954	00024951	00024955	00024956	00024957	00024958	00028075
Ref. spare kit - lead glass:	00021899	00022657	00022640	00021316	00022643	00021321	00022654	00022310	00022633	00022646	00021292	00022660	00022663	00027964
Package														
Package dimensions:	L 130 x D 100 x H 50 mm													
Package weight:	0.2 kg + weight of syringe shield													

EASY**SQUEEZE**

NEW ALTERNATIVE FOR MANUAL INJECTION

LOW & MEDIUM **ENERGY**

SPECT

ASSOCIATED PRODUCTS

- Crocobox carrier
- Easybox carrier
- PRA3/PRA10 needle bins
- Cont'Elu elution pots
- PFE/PME/PHE vial shields

The innovative Easysqueeze range of syringe shields was designed to provide tha **appropriate protection** when handling **gamma emitting radiopharmaceuticals**, with a maximum energy of 140 KeV, dedicated to **SPECT** activity. These syringe shields fit syringes from **1 to 10 mL** to match the many preparations made in conventional nuclear medicine for scintigraphic examinations. The unique concept of **colour coding according to capacity** allows for **quick and easy visual identification** while providing users with **a unique way to avoid administration errors** according to examinations, in line with the various radiopharmaceutical preparations.
The **one-piece syringe carrier is made of flexible silicone** and provides the user with an **excellent grip** on the Easysqueeze and makes the product more resistant. This type of syringe shield can be easily **cleaned** and **decontaminated by simple immersion**, without any further handling or special precautions.
The patented syringe insertion and release system allow for easy positioning and removal of the syringe while ensuring a **firm hold** during direct radiopharmaceutical injections. **The depth of insertion is adjustable** and can be selected by the user, allowing to adapt to many syringe models.

To guarantee a protection adapted to the users, the Easysqueeze syringe shields include the following, for each reference: **2 mm tungsten sleeve** and **7.5 mm lead glass window** with a density of 4.36. This specific design provides users with 98.8 % attenuation for a 740 MBq dose of ^{99m}Tc radiopharmaceutical.

Easysqueeze is the only syringe shield with **100 % recyclable and removable** components. Its **smart design** allows the user to **dismantle** the **entire** window **without the need for any tools**, e.g. if a lead glass window needs to be replaced.

This range of syringe shields meets the highest regulatory standards and is approved for sale on the US market.

CHARACTERISTICS

General	**1 mL**	**2 mL**	**2,5 mL**	**3 mL**	**5 mL**	**10 mL**
Colour:	Purple	Blue	Green	Yellow	Pink	Orange
Size planned for the syringe:	71 mm	54 mm	64 mm	73 mm	71 mm	89 mm
Inner diameter:	9 mm	11,5 mm			15 mm	18 mm
Weight:	0,1 kg	0,1 kg	0,1 kg	0,1 kg	0,14 kg	0,21 kg
Radiation protection:	2 mm tungsten / 7.5 mm lead glass (density 4.36)					
Component parts:	Coloured silicone body / Tungsten sleeve / Lead glass					
Package						
Package dimensions:	L 130 x D 100 x H 50 mm					
Package weight:	0.2 kg + weight of syringe shield					
Ref.:	**00008664**	**00008668**	**00007305**	**00008672**	**00008676**	**00008680**

Download
the product data sheet
at lemerpax.com

DRYING RACK FOR SYRINGE SHIELDS

DRYING UNIT FOR SYRINGE SHIELDS WITH INTEGRATED DRIP TRAY

ALL **ENERGIES**

SPECT **PET**

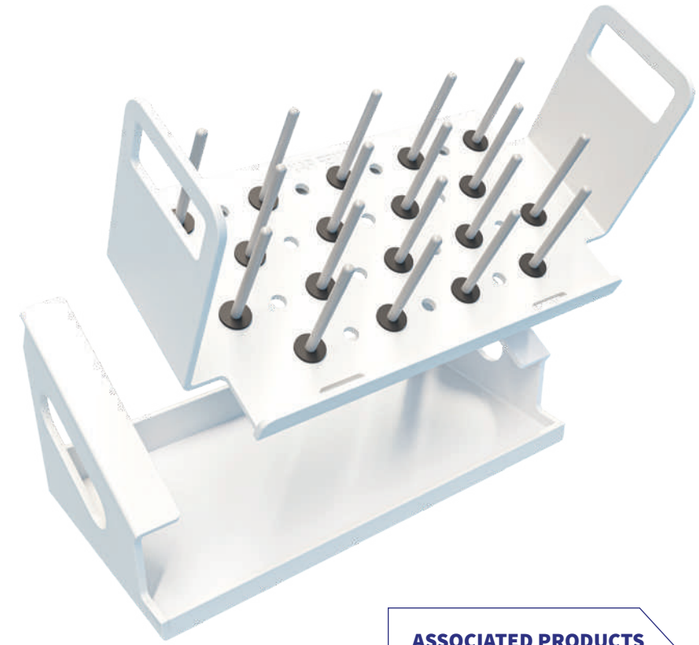

EFFECTIVE DIMENSIONS (mm)

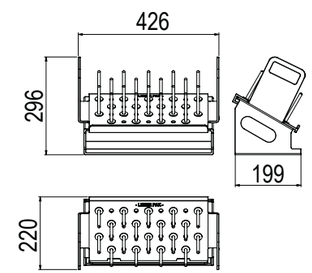

ASSOCIATED PRODUCTS

- Easyview syringe shields
- Mediclic syringe shields
- Easysqueeze syringe shields

CHARACTERISTICS

General
Total dimensions of the assembly: L 426 x D 199 x H 296 mm
Drying rack
Overall dimensions: L 426 x D 220 x H 180 mm
Materials: White PVC
Drying rods: 18 screwed in rods with rubber buffers - Ø 8 mm
Weight: 1,17 kg
Dryer support
Overall dimensions: L 392 x D 200 x H 176 mm
Angle: 30°
Materials: PVC blanc
Weight: 1,1 kg
Ref. drying rack: 00045092
Ref dryer support: 00045083

The drying rack for syringe shields is a new must-have accessory in the Lemer Pax nuclear medicine range. Focusing on the **constant improvement of the daily applications** of our users, the support can be **directly immersed in a** disinfection and decontamination **tank,** with a minimum volume of 20 L. It is made up of 18 PVC rods, each one associated with a shock absorbing washer, to avoid any risk of scratching and breaking of lead glass when inserting the syringe shield. It is possible to position **18 to 36 syringe shields** simultaneously and thus avoid the usual risks of syringe shield breakage due to impact during soaking.
Drying syringe shields is made easy with a **benchtop drying rack**. The 5 % angle for the dryer and 30° angle for its support allows for quick drainage of the rinsing liquid, which is directly stored in the 1-litre retention tank. Thanks to its **lightweight** and **two ergonomic handles**, the syringe shield drying unit can be moved very easily. The choice of white PVC materials **simplifies daily upkeep**, and ensures an **extremely long service life**, without chemical interaction with hospital decontamination products or oxidization problems.

Download
the product data sheet
at lemerpax.com

MEDI CARRIER

SHIELDED CARRIER FOR SYRINGES OF RADIOPHARMACEUTICAL SUBSTANCES

ALL **ENERGIES**

SPECT **PET**

ASSOCIATED PRODUCTS

- Mediclic syringe shields
- Easyview syringe shields
- Easyqueeze syringe shields
- Manubox trolley
- Combined transport trolley

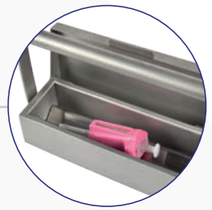

Download
the product data sheet
at lemerpax.com

The Medi carrier case is the essential dose transport accessory for all Nuclear Medicine departments and is suitable for all types and models of syringe from 1 to 10 mL. With **two thicknesses of shielding**, 3 mm and 10 mm of lead, it can be adapted to both SPECT and PET activities, for reduced exposure of the hands and fingers as well as the whole body of the user when carrying radioactive doses to the injection rooms and cubicles. It allows for **safe transport** of patient syringes labelled with radioisotopes such as ^{99m}Tc, ^{111}In, ^{201}Tl, ^{177}Lu and also ^{18}F, ^{68}Ga, ^{13}N for example.
The cylindrical handle allows the user **to firmly grip** the carrier and **use it comfortably** in daily activities.

The carrier is supplied with a removable stainless steel mini corrugated plate adjusted to the internal dimensions of the case, which stabilises the syringes during transport, regardless of the model and brand of syringe shield used. Thus, minimising movement or possible contamination during transport.

This ultra-robust carrier has been designed by Medisystem to last over time, and has a stainless steel finish both inside and out and its watertight design allows for easy cleaning and decontamination. It also features an additional innovation: **optional locking system** for total security. Thus, the temporary storage of radioactive doses is controlled and secure.
The Medi carrier case meets the **highest regulatory standards** and is approved for sale on the **US market**.

CHARACTERISTICS

EFFECTIVE DIMENSIONS (mm)

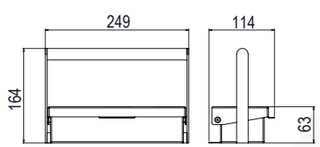

Low & Medium Energy Model

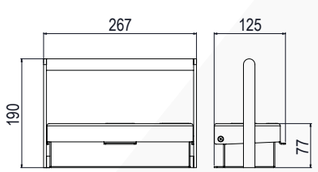

High Energy Model

General	Medi LME carrier	Medi HE carrier
Overall dimensions:	L 249 x D 114 x H 63 mm	L 267 x D 125 x H 77 mm
Total height with handle:	164 mm	190 mm
Internal dimensions:	L 215 x D 60 x H 46 mm	
Radiation protection:	3 mm lead + 1 mm stainless steel (inside and outside)	10 mm lead + 1 mm stainless steel (inside and outside)
Component parts:	Stainless steel structure Corrugated stainless steel plate L 213 x D 57 x H 1 mm	
Weight:	4,0 kg	12,2 kg
Package		
Package dimensions:	L 320 x D 250 x H 180 mm	L 300 x D 150 x H 250 mm
Package weight:	4,8 kg	16 kg
Ref.:	**00034037**	**00034036**

EASYBOX CARRIER

SHIELDED CARRIER FOR SYRINGES OF RADIOPHARMACEUTICAL SUBSTANCES

ASSOCIATED PRODUCTS

- Mediclic syringe shields
- Easyview syringe shields
- Easyqueeze syringe shields
- BPP30 HV shield
- ALARA shield

ALL **ENERGIES**

SPECT **PET**

Download
the product data sheet
at lemerpax.com

The Easybox 100 % recyclable transport, was specially designed to **facilitate the safe transport of patient doses** while optimizing the **weight**, from the radiopharmaceutical preparation laboratory to the injection cubicles and rooms, but also to the SPECT and PET examination rooms for dynamic imaging examinations. With to its **two thicknesses of shielding**, 3 mm and 6 mm of lead, this case can transport radioisotopes of various energies such as ^{99m}Tc, ^{111}In, ^{201}Tl, ^{177}Lu and ^{18}F, ^{68}Ga, ^{13}N.
This shielding on the extremities where the cone of irridiation from the needle and the plunger of the syringe is located, has been doubled to guarantee improved radiation protection for the user during the transport of the radioactive dose.

In order to facilitate the complete opening of the case, a 304L stainless steel **rotating handle** has been selected and designed for ergonomic use in daily activities. An anti-swing locking system completes the rotary handle of the case to avoid any risk during transport.
In order to improve **work comfort** for the users, the **identification** of the different radioactive syringes in the department is made easier thanks to the different coloured labels on the case. Thus, errors by substitution of radiopharmaceutical drugs are avoided.
The choice of ABS coating on the Easybox case allows for easy cleaning and decontamination.
The Easybox case meets the highest regulatory standards and is approved for sale on the US market.

CHARACTERISTICS

General	Easybox LME	Easybox HE
Overall dimensions:	L 256 x D 142 x H 67 mm	
Total height with handle:	150 mm	
Internal dimensions:	L 193 x D 98 x H 46 mm	L 181 x D 92 x H 40 mm
Radiation protection:	3 mm lead on 4 sides and 6 mm lead on the side ends	6 mm lead on 4 sides and 12 mm lead on the side ends
Component parts:	Opaque PELI case - Soft lead body - ABS bottom cover Blister pack ABS lid - 304L stainless steel handle	
Weight:	3,48 kg	5,91 kg
100 % recyclable		
Package		
Package dimensions:	L 320 x D 240 x H 170 mm	
Package weight:	5 kg	7,4 kg
Ref.:	**00013222**	**00014236**

EFFECTIVE DIMENSIONS (mm)

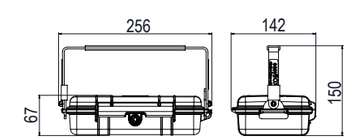

Low & Medium Energy Model

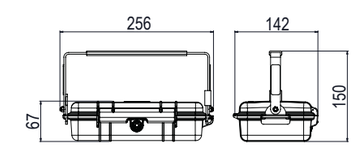

High Energy Model

CROCOBOX CARRIER

SHIELDED CARRIER CASE FOR SYRINGES OF RADIOPHARMACEUTICAL SUBSTANCES

ALL **ENERGIES**

SPECT **PET**

PATENT PENDING

Download
the product data sheet
at lemerpax.com

ASSOCIATED PRODUCTS

- Easyview syringe shields
- Mediclic syringe shields
- Manubox trolley

The **Crocobox** is the **latest addition** to the Lemer Pax & Medisystem **range of shielded carriers** for **easy transportation** of radiopharmaceutical syringes into the injection cubicles or rooms for **SPECT and PET examinations**. With its **innovative rotating anti-pinch and anti-tipping opening and closing system**, it offers the users **safety and ergonomics** in their daily activities. It is available in **two shielding versions** to accommodate **all the energy levels** of radioisotopes commonly used in nuclear medicine: ^{99m}Tc, ^{111}In, ^{123}I, ^{177}Lu, ^{201}Tl, ^{131}I, ^{18}F, ^{68}Ga, etc. The high-energy version "Crocobox HE" can be positioned on the Manubox transport trolley to avoid carrying the weight of the shielding required for the transport of the most irradiating radioisotopes.

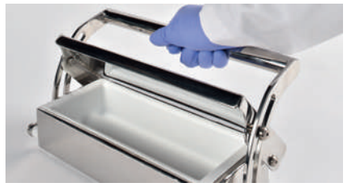

Its cylindrical handle covered with 304L stainless steel makes it easy to grip and hold during transport. It is equipped with a **spill containment tray** limiting any possible propagation of radioactive leakage. Two models of this containment tray are supplied, made of white ABS and **resistant to acids and decontaminants**. A **robust** HDPE 500 **anti-tipping plate** ensures that the case is **stable** when opened. It is made of **stainless steel** with **sealed welds** for durability and easy to clean on a daily basis, even by immersion. A locking option is available on request for enhanced security

Download
the product data sheet
at lemerpax.com

CHARACTERISTICS

General	Crocobox LME	Crocobox HE
Overall dimensions:	L 283 x D 124 x H 66 mm	L 295 x D 128 x H 89 mm
Total height with handle:	178 mm	195 mm
Internal dimensions:	L 210 x D 80 x H 40 mm	L 200 x D 69 x H 46 mm
Radiation protection:	6 mm lead at both ends and 3 mm lead on all other sides + 4 mm stainless steel	16 mm lead on both ends, 10 mm on top and 8 mm on all other sides + 4 mm stainless steel
Component parts:	304L stainless steel structure - HDPE 500 anti-tipping plate - 304L stainless steel cylindrical handle - 2 white ABS containment trays	
Weight:	5,4 kg	12,1 kg
Package		
Package dimensions:	L 300 x D 300 x H 300 mm	L 300 x D 300 x H 300 mm
Package weight:	7,4 kg	14,1 kg
Ref.:	**00038013**	**00038025**
Spare kit		
Containment tray ref.:	**00040630**	**00040632**

EFFECTIVE DIMENSIONS (mm)

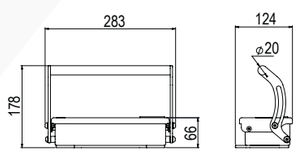

Crocobox LME

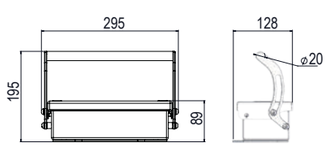

Crocobox HE

MANUBOX

MOBILE TROLLEY FOR CARRIER CASE

HIGH **ENERGY**

PET

ASSOCIATED PRODUCTS

- Medi HE carrier
- Crocobox HE carrier (on request)

Manubox is **a mobile trolley** for the **safe transport of high-energy shielded cases** and for the transport of doses of radiopharmaceuticals labelled with ^{18}F, ^{131}I, ^{68}Ga and ^{13}N, from the preparation laboratory to the injection rooms or cubicles, **thus eliminating the need to carry heavy loads**. The Manubox trolley is **highly mobile**, with its **5 swivel castors**, and also features a **large handle** for easy handling. The large handle is covered in a black heat-shrinkable sheath for **easy** handling, and allows for easy one or two-handed **operation**. It is equipped with a fixed cavity, made of POM, a robust and easily decontaminable material, adapted to the size of the case used, to ensure a good hold and **total stability of the case** during the entire transport time.

Manubox can be adapted to all models of Lemer Pax and Medisystem cases on request and further to a feasibility study. It is entirely made of 304L stainless steel for long-lasting resistance, for easy daily maintenance, disinfection and decontamination. The tray features a **rim** over its entire surface, similar to a **spill containment tray, to protect users from possible contamination and leakage**. This large tray with a rim also makes it possible to position and transport the equipment and consumables such as compresses and disinfectants required for the administration of radiopharmaceutical doses.

EFFECTIVE DIMENSIONS (mm)

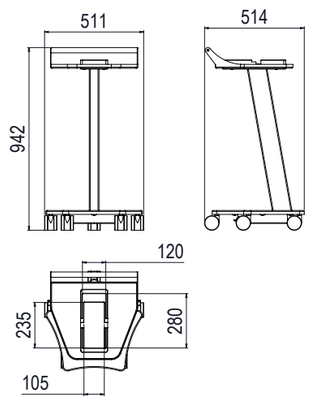

Download
the product data sheet
at lemerpax.com

CHARACTERISTICS

General
Overall dimensions: L 511 x D 514 x H 942 mm
Tray dimensions: L 450 x D 400 mm
Tray height: 835 mm
Component parts: - 304L stainless steel structure - Base with natural POM case cavity - Black thermo-sleeve handle - 5 double castors Ø 75 mm
Weight: 64 kg
Compatibility: with Medi HE carrier - with Crocobox HE carrier on request - other model according to study
Accessories
Medi HE carrier case ref.: 00034036
Compatibility with other carriers upon request
Package
Package dimensions: L 800 x D 800 x H 1 500 mm
Package weight: 69 kg
Ref.: 00032296

COMBINED TRANSPORT **TROLLEY** FOR MANUAL INJECTION

TRANSPORT TROLLEY FOR HIGH ENERGY CARRIER AND BIN

ALL **ENERGIES**

SPECT **PET**

ASSOCIATED PRODUCTS

- Medisharp LME and HE bins
- Medi LME and HE carriers

Download **the product data sheet** at lemerpax.com

The combined transport trolley is a healthcare trolley **for manual injections of radiopharmaceutical drugs** in nuclear medicine, specially designed for **multi-purpose applications**. It can be **mobile or static**, and is compatible with **SPECT or PET** activities. On its first level it can accommodate, a **shielded** radiopharmaceutical dose carrier, as well as a **shielded benchtop waste bin**, to store used and contaminated needles and syringes after injection to the patient. It features a total of **three independent levels** to **adapt to the needs and applications of the services**. With fitted and machined cavities on its first level, each item (bin and case) has a dedicated location for **stability** during use. The middle level tray allows, for example, the **storage of infusion equipment** as well as **accessories and consumables necessary for** patient **injections**. It is made of stainless steel **with a rim** to **prevent material from falling out when moving**. With two large handles at each end for **easy manoeuvrability**, it is **perfectly mobile** with its four double castors with **brakes** to **ensure stability** when used in **static conditions**. It can also be located in the radiopharmaceutical administration rooms or gamma camera rooms to avoid unnecessary travel and to keep all the necessary equipment close to the users, particularly for **dynamic scintigraphic examinations**. With its stainless steel and POM composition, it allows for **easy daily cleaning** and **quick decontamination**.

EFFECTIVE DIMENSIONS (mm)

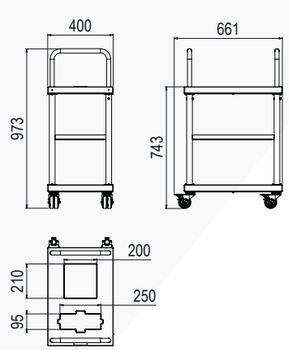

CHARACTERISTICS

General
Total dimensions: L 661 x D 400 x H 973 mm
Component parts: - 304L stainless steel structure - 2 natural POM trays - 1 stainless steel tray - 4 double castors with brakes
Tray external dimensions: L 400 x D 600 mm
Effective dimensions 1st level: with waste bin and carrier cavities L 400 x D 600 mm height/floor: H 730 mm
Effective dimensions 2nd level: L 339 x D 528 mm height/floor: H 420 mm
Effective dimensions 3rd level: L 360 x D 450 mm height/floor: H 130 mm
Weight of trolley alone: 50 kg
Weight with LME carrier and bin: 70 kg
Weight with HE carrier and bin: 120 kg
Accessories
Medisharp HE sharps bin Ref.: 00034048
Medi HE shielded carrier Ref.: 00034036
Medisharp LME sharps bin Ref.: 00034047
Medi LME shielded carrier Ref.: 00034039
Package for trolley alone
Package dimensions: L 800 x D 600 x H 1 100 mm
Package weight: 70 kg
Ref.: 00034085 (for LME accessories) **00033039** (for HE accessories)

CHT

SHIELDED TRANSPORT TROLLEY FOR RADIOPHARMACEUTICAL DRUG

HIGH **ENERGY**

PET

ASSOCIATED PRODUCTS

- Posisafe® Pb30 container
- Posisafe® W20 & W30 container

Download **the product data sheet** at lemerpax.com

EFFECTIVE DIMENSIONS (mm)

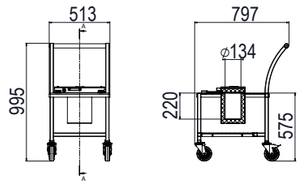

CHARACTERISTICS

General
Overall dimensions: L 797 x D 513 x H 995 mm
Internal dimensions: Ø 134 x H 220 mm
Height of work surface: 575 mm
Weight: 113 kg
Materials: Bead blasted 304L stainless steel
Mobility: 2 fixed castors at the front and 2 swivel castors with brakes at the rear
Safety: lockable
Equipment: stainless steel bottom tray
Shielding: 30 mm of lead
Access: opening of the sliding shielded cover on rail
Radiation protection:
Maximum radioactivity that can be handled to obtain a dose rate <100 µSv/h at 5 cm from the walls*

Radionuclides	Activities (the source is in a 30 mm lead pot)
^{18}F	305 GBq
^{68}Ga	20.5 GBq
^{131}I	256.7 GBq

Options
Height adjustable handle
Complete casing
Package
Package dimensions: L 1 200 x D 800 x H 1 400 mm
Package weight: 170 kg
Ref.: 00032257

*Regulations in ASN Guide No.32 "In vivo nuclear medicine facilities: minimum technical rules for design, operation and maintenance"

The **CHT trolley** was created to **reduce musculoskeletal disorders** identified by users in nuclear medicine. It allows for **effortless transport of** shielded lead or tungsten containers **for easy transport of single or multi-dose high-energy radiopharmaceuticals**, marked with ^{18}F, ^{13}N, ^{131}I, etc. By eliminating the need to handle heavy loads, the CHT trolley represents a **significant improvement in daily practice** in the nuclear medicine sector.

The trolley's **shielded cabinet** features a **radiation shield of 30 mm of lead adapted to the** source **transport regulations** in force in the services. Providing users with **improved working comfort** combined with the **assurance of appropriate protection** against the ionising radiation of the isotopes used, whatever the transport time required. The CHT's **manoeuvrability** is **optimised** by its **large, ergonomic handle**, which can be adjusted in height (optional), allowing the trolley to be easily guided in movement. Its **mobilisation is facilitated by its four double castors equipped with brakes to secure it when stopped** during loading and unloading of the sources.

The **sliding cover is shielded** to ensure a significant reduction in full-body exposure of the users. It also features a **lockable** system to ensure the **safety** and **full containment** of the transported source in the event of a need for interim storage. The CHT trolley features a **robust stainless steel frame for easy and durable maintenance**.

OUR VISION FOR DESIGN

The **ALARA** “As Low As Reasonably Achievable” precautionary principle is one of the basic principles of **protection against ionising radiation**. This principle has guided our teams in the design of this **mobile shield** model **dedicated to PET activity in nuclear medicine**.

This “As Low As Reasonably Achievable” precautionary principle perfectly illustrates the **optimisation** work carried out on this product in order to offer complete full-body radiation protection to our users while preserving easy handling properties.

ALARA INJECTION SHIELD

MOBILE PROTECTION SHIELD

HIGH **ENERGY**

PET

ASSOCIATED PRODUCTS

- HE Medi carrier
- HE Crocobox carrier
- HE Mediclic syringe shield
- HE Easyview syringe shield

Ref.: 00034039

Ref.: 00016896

Download
the product data sheet
at lemerpax.com

The ALARA mobile shield is an essential protection accessory for daily activities of any PET service, whether it is equipped with an automated fractionating unit, or manual radiopharmaceutical dose preparation equipment such as a shielded hot cell.

The ALARA shield can be used at every stage of patient management during a diagnostic PET examination, regardless of the radiopharmaceutical used (^{18}F-FDG, ^{18}F-CHOLINE, ^{18}F-DOPA, ^{18}F-FNa, etc.) and the isotope concerned (^{18}F, ^{68}Ga, ^{13}N, etc.).
It will be useful during the manual injection of the radiopharmaceutical, but also during the removal of the peripheral venous catheter from the patient, and it is essential for the user during the installation of the patient under the PET-CT camera.

Its gradual top-to-bottom shield thickness, ranging from 30 mm to 10 mm of lead, provides for both optimised weight (178 kg) and a significant reduction of user full-body exposure.

FOCUS

A wide 316L stainless steel shelf with a rim, which can be positioned at **3 different heights**, can be used to hold a shielded case or a treatment tray for manual injection or catheter removal. **Hygiene** and **decontamination** are facilitated and the rim helps to contain any contamination.

The **viewing window** (L 310 x H 230 mm) at a 32° angle, made of 72 mm thick **lead glass**, facilitates **precise visual control** of any technical action to be performed.

It is equipped with a **retractable step**, and can be adapted to **all user heights** for **improved ergonomics**.

The shield is easy to move with two aluminium side handles and four 75 mm diameter castors, two of which have brakes, to **secure** the static **position** of the shield.

A drip stand is also provided for NaCl perfusion in case of possible rinsing operations after radiopharmaceutical injection for example.

The **innovative geometry** of the shield legs allows for **optimal manoeuvrability** and easy passage under beds and stretchers, thus maintaining **proximity between the healthcare personnel and the patient**.

EFFECTIVE DIMENSIONS (mm)

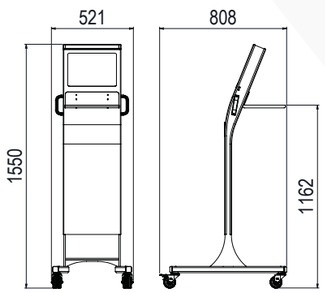

CHARACTERISTICS

General
Overall dimensions: L 521 x D 808 x H 1 550 mm
Radiation protection: Gradual shield thickness of 30 mm lead on the upper part down to 10 mm lead on the lower part
Equipment: Shelf size: L 346 x W 271 mm Effective shelf dimensions: L 340 x W 253 mm 4 castors Ø 75 mm, 2 with brakes
Materials : S235 RAL 9010 316L stainless steel shelf
Wheel clearance under trolley: 138 mm
Handle height: 1 164 mm

Viewing window dimensions: L 310 x H 230 x Th. 72 mm
Window inclination: 32°
Density: 4,36
Weight: 178 kg
Package
Package dimensions: L 1 000 x D 800 x H 1 800 mm
Package weight (product without options): 220 kg
Ref.: 00016896
Retractable step ref.: 00034039

BPP30 HV SHIELD

HEIGHT-ADJUSTABLE MOBILE PROTECTION SHIELD

HIGH **ENERGY**

PET

The BPP30 HV mobile shield is the essential accessory for any PET service, whether it is equipped with an automated or manual radiopharmaceutical dose preparation and administration system.
The BPP30 HV shield is **versatile**, and can be used at each stage of patient care during a diagnostic PET examination, with any radiopharmaceutical (^{18}F-FDG, ^{18}F-CHOLINE, ^{18}F-DOPA, ^{18}F-FNa, etc.) and the isotope concerned (^{18}F, ^{68}Ga, ^{13}N, etc.).

With height **adjustme nt**s controlled by a hydraulic foot-pedal, it **adapts quickly and effortlessly** to the size of the operator, for full-body protection during operations:
- administration of radiopharmaceuticals
- deperfusion or removal of a patient's peripheral venous catheter prior to imaging
- or when positioning the patient under the PET-CT camera.

The 30 mm lead shielding over the entire height of the shield ensures **safety and full-body protection** of the user over the entire height of the shield, allowing the user to get as close to the patient as possible, thus preserving the human contact of the caregiver, which is essential for the patients.

Adjustable height

The fully **non-magnetic BPP30 IRM** version is perfectly suited for PET MRI activity.

Ref.: 00016732

Ref.: 00028593

Download
the product data sheet
at lemerpax.com

FOCUS

The presence of a wide, robust, bead-blasted 304L stainless steel shelf facilitates hygiene and radioactive decontamination. It fits all radiopharmaceutical substance carrier cases, syringe shields or other injection trays. It thus facilitates manual administration.

The viewing window (L 320 x H 200 mm) with a 45° angle, made of high-density lead glass (thickness 80 mm), allows for precise **visual control** of any technical gesture to be performed.
The shield is moved by means of two aluminium handles and four 360° swivel castors with a diameter of 125 mm and non-staining rubber tyres.

To secure the static position of the shield, two wheels are equipped with brakes, blocking both rotation and translation movements, thus guaranteeing safe placement between the operator and the injected patient.
Daily disinfection maintenance and radioactive decontamination are made easier with the decontaminable coating (colour RAL 9010).

EFFECTIVE DIMENSIONS (mm)

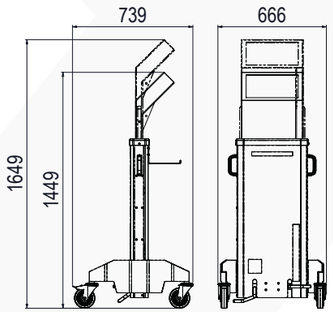

ASSOCIATED PRODUCTS

- Crocobox HE carrier
- Medi HE carrier
- Mediclic syringe shields
- Easyview syringe shields

CHARACTERISTICS

General	BPP30 HV	BPP30 IRM
Overall dimensions:	L 666 x D 739 x H 1 449/1 649 mm	L 806 x D 618 x H 1 493 mm
Radiation protection:	30 mm lead / 80 mm lead glass	
Equipment:	2 aluminium handles 304L stainless steel bead blasted shelf 4 castors Ø 125 mm, non-staining rubber tyres, 2 with brakes	2 aluminium handles 316L stainless steel bead blasted shelf 4 castors Ø 150 mm, of which 2 with brakes
Materials:	Painted steel RAL 9010	Painted 5754 aluminium RAL 9010
Adjustable height:	Yes Hydraulic raising and lowering control	No
Variable height stroke:	200 mm	N/A
Minimum viewing axis:	1 364 mm	1 409 mm
Viewing window dimensions:	L 320 x H 200 x Th. 80 mm	
Window inclination:	45°	
Density:	4,8	
Weight:	255 kg	163 kg
Package		
Package dimensions:	L 1 025 x D 725 x H 1 800 mm	
Package weight (product without options):	310 kg	220 kg
Réf :	**00028593**	**00016732**

MANUJET

MANUAL SHIELDED RADIOPHARMACEUTICAL INJECTION UNIT

HIGH **ENERGY**

PET

The simple and functional Manujet mobile injection unit was designed to **secure manual intravenous injections of high energy radiopharmaceuticals** administered during **PET** diagnostic examinations. As an alternative to traditional manual injections with syringe shields, it **complements automatic dose preparation systems** such as the Easypet shielded hot cell, the Mediflash airlock chamber or the L-Block Automatic system, to offer a **complete high quality radiation protection solution** from dose preparation to patient administration. Manujet offers users **radiation protection adapted to** their practices, with its 15 mm thick tungsten shield, and provides **attenuation of over 96 %** for doses of ^{18}**F** or ^{68}**Ga** labelled radiopharmaceuticals.

This **light weight** unit (80 kg) with 5 double castors, is easy **to handle** and **to move around**. Its two side handles allow it to be **moved effortlessly** to carry patient doses to the injection cubicles. The injection is performed by a **highly sensitive manual plunger**, activated by simple pressure from the user, which eliminates any risk of extravasation during the administration of the radiopharmaceutical. It is made entirely of stainless steel, and therefore allows for simple and quick daily disinfection and decontamination, when required, without altering the injection unit's components.

ASSOCIATED PRODUCTS

- Easypet hot cell
- Mediflash airlock chamber
- Automatic L-Block

Download the product data sheet at lemerpax.com

FOCUS

The 15 mm thick **tungsten shielded cylinder** [**1**] is fitted with a shielded cap [**2**] to allow total and secure containment of the radiopharmaceutical dose during transport. The two ridged screws and the large handle, allow for easy dismantling for complete and precise disinfection and decontamination.

The syringe cartridge and its shielded syringe shield (9 mm tungsten) condition and ensure radiation protection of the users of the patient dose previously prepared with the Lemer Pax and Medisystem automatic systems without any manual operation that could cause radiation to the users.

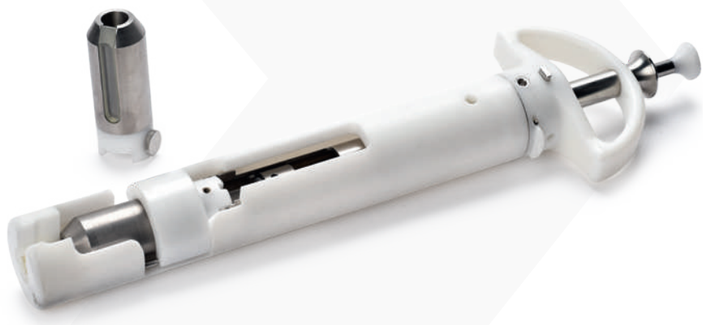

The infusion stand [**3**], removable and height-adjustable, facilitates dose dilution and rinsing.

The kits: the specific construction of the patient injection kit allows the dose dilution, injection and rinsing steps to be carried out safely and with ensured radiation protection, without any manipulation required by the user. The bubble trap and 0.22 µm filter also ensure and guarantee the integrity of the drug and the capture of any air bubbles.

CONSUMABLES

Sterile syringe kit
Ref.: 00008218

Sterile injection kit
Ref.: 00006355

CHARACTERISTICS

General
External dimensions of the injection unit alone: L 511 x D 537 x H 996 mm
Dimensions with serum rod: Minimum height: 1 560 mm (480 mm stroke)
Shielding thickness: Cylinder: 15 mm tungsten Syringe shield: 9 mm tungsten
Component parts: - Tungsten and 304L stainless steel shielded cylinder - Natural white POM syringe cartridge - Tungsten syringe shield - 304L stainless steel injection plunger with volume scale - 304L stainless steel serum rod - Frame + 2 handles made of bead blasted 304L stainless steel - 5 double castors, 2 with brakes - Transport cap holder
Weight: 80 kg
Syringe volume: 10 mL
Weight of cartridge (incl. syringe shield): 2 kg

Radiation protection:

Radionuclides	% of attenuation
^{18}**F**	96,71 %
^{68}**Ga**	96,36 %
^{131}**I**	98,59 %

Package
Package dimensions: L 830 x D 830 x H 1 320 mm
Package weight (product without options): 150 kg
Ref.: 00012253

EFFECTIVE DIMENSIONS (mm)

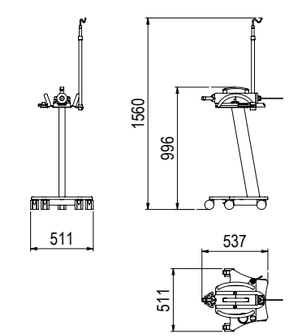

MANUJET SHIELD

MOBILE MANUAL INJECTION SHIELD

HIGH **ENERGY**

PET

ASSOCIATED PRODUCTS

- Easypet hot cell
- Mediflash airlock chamber
- Automatic L-Block

For improved **synergy** between the Manujet **manual injection unit** and the BPP30 HV **variable height shield, the Manujet Shield** provides a **smart combination** of two equipment units for the intravenous injection of high-energy radiopharmaceutical doses, notably ^{18}F and ^{68}Ga. This **multi-purpose** shield offers optimal full-body radiation protection to users, both during the **injection of the radiopharmaceutical** and during **deperfusion** and monitoring of the patient.

With height adjustme nts controlled by a hydraulic foot pedal, it adapts quickly and effortlessly to the size of the operator. **The shield is easy to move** using **two aluminium handles** and **four 360° swivel castors** with a diameter of 125 mm and non-staining rubber tyres. The **large shielded viewing window** (L 320 x H 200 mm) at a 45° angle, made of 80 mm thick high-density lead glass, provides **precise visual control** during the injection and for all technical actions to be performed.

The radiopharmaceutical dose is pre-prepared by one of the Lemer Pax & Medisystem automatic fractionating systems: Easypet, Mediflash, L-Block Automatic and packed in its syringe cartridge. It is then inserted in the 15 mm tungsten shielded cylinder. The injection is performed by a **highly sensitive manual plunger**, activated by simple pressure from the user, which eliminates any risk of extravasation during the administration of the radiopharmaceutical. Daily **disinfection** maintenance and **radioactive decontamination** are made **easier** with the decontaminable coating (colour RAL 9010).

Download the product data sheet at lemerpax.com

FOCUS

The 15 mm thick **tungsten shielded cylinder** is fitted with a shielded cap to allow total and secure containment of the radiopharmaceutical dose during transport. The two ridged screws and the large handle, allow dismantling for complete and precise disinfection and decontamination.

The syringe cartridge and its shielded syringe shield (9 mm tungsten) condition and ensure radiation protection of the users of the patient dose previously prepared with the Lemer Pax and Medisystem automatic systems without any manual operation that could cause radiation to the users.

The kits: the specific construction of the patient injection kit allows the dose dilution, injection and rinsing steps to be carried out safely and with ensured radiation protection, without any manipulation required by the user. The bubble trap and 0.22 µm filter also ensure and guarantee the integrity of the drug and the capture of any air bubbles.

An optional support shelf is available to position the accessories and consumables required for deperfusion of the patient.

CONSUMABLES

Sterile syringe kit
Ref.: 00008218

Sterile injection kit
Ref.: 00006355

CHARACTERISTICS

General
Overall dimensions: L 666 x D 739 x H 1 447/1 647 mm
Shielding thickness: Shield: 30 mm of lead Cylinder: 15 mm tungsten Syringe shield: 9 mm tungsten
Equipment: - Shielded cylinder - Syringe cartridge - Syringe protector - 2 aluminium handles - Optional 304L bead-blasted stainless steel shelf - 4 castors dia. 125 mm, non-staining rubber tyres, 2 with brakes
Adjustable height: Hydraulic raising and lowering control, 200 mm stroke 1 230 to 1 430 mm
Materials: Painted steel RAL 9010
Viewing window dimensions: L 320 x H 200 x Th. 80 mm
Window inclination: 45°
Density: 4,8
Weight: 248 kg
Syringe volume: 10 mL
Weight of cartridge (incl. syringe shield): 2 kg

Radiation protection:

Radionuclides	% of attenuation
^{18}F	99,99 %
^{68}Ga	99,96 %
^{131}I	99,99 %

Package
Package dimensions: L 1 025 x D 725 x H 1 800 mm
Package weight (product without options): 300 kg
Ref.: 00017181

EFFECTIVE DIMENSIONS (mm)

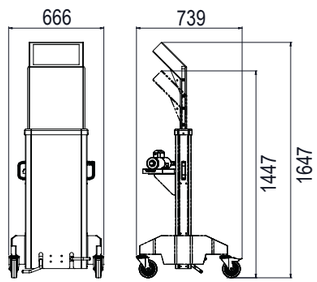

JETTI®

SHIELDED AUTOMATIC RADIOPHARMACEUTICAL INJECTION SYSTEM

HIGH **ENERGY**

PET

ASSOCIATED PRODUCTS

- Easypet hot cell
- Mediflash airlock chamber
- Automatic L-Block

The Jetti® automatic injection unit is a **medical device** designed for the **radiation protected intravenous administration of high-energy radiopharmaceutical drugs** labelled with **^{18}F** and **^{68}Ga** for **PET** diagnostic examinations. To guarantee the continuity of optimal radiation protection, the patient dose is prepared in advance by one of the Lemer Pax and Medisystem automatic fractionating systems, such as the Easypet shielded hot cell, the Mediflash airlock chamber, or the automatic L-Block system.

The Jetti® injection unit is **mobile** and **versatile** and allows the **patient dose to be transported** to the injection room or cubicle and **administered automatically or manually, in conditions of radiation protection and hygiene that are adapted and optimised** for both patients and users. The 40 mm thick lead glass shield provides the user with full visual control over the patient and the injection site during the entire radiopharmaceutical administration.

In order to guarantee full safety of the patient during injection and to prevent any risk of extravasation, Jetti® is also equipped with **two pressure sensors** and an **injection speed regulator**. The specific construction of its **dedicated injection kit guarantees the integrity of the radiopharmaceutical**, and allows the user to proceed to the dilution of the patient dose, without requiring any specific action, and to its administration as well as to the required NaCl rinses, regardless of the required volume.

REGULATORY FRAMEWORK

The Jetti® injection unit meets the requirements of **EU regulation 2017/745** as a **Class IIb medical device**. Electromedical device, compliant with **EN 60601-1:2006 (+ A1/2013)** for general safety requirements, **EN 60601-1-2:2015** for electromagnetic compatibility, **EN 60601-1-6:2010 (+ A1/2015)** and **EN 62366: 2015 (+ A1/2020)** for application of usability engineering to medical devices.

FOCUS JETTI® MAX:

A specific version called **Jetti® Max** was designed and developed to handle other **Iodine-131** radiopharmaceuticals in **Vectorised Internal Radiation therapy (VIR)**, with an administration protocol that requires a slow injection. The tungsten cylinder and syringe cartridge have been modified and optimised to increase the volume of the syringe containing the radiopharmaceutical that can be accommodated in this version of the injection unit. Thus, a **slow (30 minutes)** and **safe injection** of the radiopharmaceutical is possible for a **maximum volume of 50 mL**. Other radiopharmaceutical applications and compatibilities are also possible with the Jetti® Max injection, including the **administration of ^{177}Lu** labelled radiopharmaceuticals.

CONSUMABLES

Sterile syringe kit
Ref.: 00008218

Sterile injection kit
Ref.: 00006355

1 | Lead glass screen, 10 mm lead equivalence **2** | Mobile shielded cart, 10 mm lead **3** | Shielded cylinder, 15 mm tungsten, and shielded syringe shield, 9 mm tungsten **4** | Shielded cartridge containing the dose, inserted and locked in the cylinder **5** | Control panel and remote control for controlling the various functions (dilution, injection, rinsing) **6** | Peristaltic pump for automatic injection **7** | Pressure sensors to stop the injection in case of back pressure **8** | Removable spill containment tray to contain any contamination or leakage when connecting/removing the kits **9** | Emergency stop button to stop the movements if necessary **10** | Variable speed drive to manage the injection time and to adapt to the patient's injection sites **11** | Swivel castors for easy handling **12** | Battery or mains operated

OPERATING PRINCIPLE:

1. The **patient dose**, previously collected by one of the Lemer Pax and Medisystem automatic systems, is **loaded** by manually inserting the syringe cartridge into the 15 mm thick tungsten cylinder, which is fitted with a safety lock for transporting the dose to the injection cubicle.

2. The dilution of the patient dose to 10 mL is carried out automatically at the beginning of the radiopharmaceutical administration cycle.

3. Injection is triggered by the operator who presses the "injection" button on the control panel or via the remote control. Air bubbles are filtered and captured instantaneously during injection by the 0.22 µm filter and the bubble trap contained in the injection kit. The potentiometer regulates the injection speed according to the user's set point, which can be adjusted at any time. This allows the delivery rate of the radiopharmaceutical to be adapted to the injection site and the size of the catheter used. Two pressure sensors, before and after the peristaltic injection pump, stop the administration of the radiopharmaceutical instantly in the event of resistance being detected during the cycle and alert the operator with an audible alarm.

4. Rinsing operations can then be repeated as many times as the operator requires, by pressing the button, without requiring any manual operation or rotating of the three-way valve, thus ensuring minimum exposure to the hands and fingers.

5. The downgraded or manual injection mode can be set at any time using the graduated plunger adaptable on the syringe cartridge and after releasing the injection kit from the peristaltic pump. All the movements: dilution of the dose, injection and rinsing are then carried out manually, however, at a distance from the source, by simply pressing or withdrawing the plunger. The user remains completely protected behind the large lead glass screen while being able to fully monitor every step of the radiopharmaceutical administration cycle.

Download
the product data sheet
at lemerpax.com

EFFECTIVE DIMENSIONS (mm)

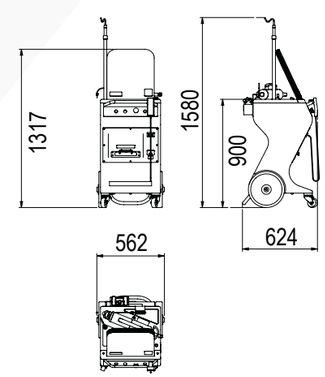

CHARACTERISTICS

General	Jetti®	Jetti® Max
External dimensions (excluding serum rod):	L 562 x D 624 x H 1 317 mm	
External dimensions (with serum rod):	L 562 x D 624 x H 1 580 mm	
Shielding thickness:	Frame: 10 mm of lead Syringe shield: 9 mm tungsten Lead glass screen: 40 mm (density 4.36)	
	Cylinder: 15 mm tungsten	Cylinder: 8 mm tungsten
Component parts:	Shielded cylinder - Syringe cartridge - 2 syringe shields - Manual graduated injection plunger - Height adjustable serum rod (480 mm stroke) - 2 double locking swivel castors - 2 large fixed castors - Injection kit support - Removable containment tray	
Materials:	Aluminium frame - 304L stainless steel (equipment) - Natural POM, tungsten	
Weight:	176 kg	170 kg
Syringe volume:	10 mL	50 mL
Battery life:	8 hours in operation on battery or mains	
Weight of cartridge (incl. syringe shield):	2 kg	4,6 kg
Package		
Package dimensions:	L 800 x D 1 200 x H 1 550 mm	
Package weight (product without options):	230 kg	233 kg
Ref.:	**00008687**	**00013062**

OUR VISION FOR DESIGN

Posijet® was initially designed for **fractionating and intravenous administration of multidose PET radiopharmaceuticals,** and is constantly upgrading to **adapt to new applications and new tracers**. In addition to the development of its **dedicated paediatric version** (specific packaging, application and safety parameters), Posijet® now features a **new innovative feature: administration of therapeutic radiopharmaceuticals**.

It **can be customised** according to the service's practices, making it the **most versatile shielded preparation and injection unit** currently available on the market.

POSIJET®

SHIELDED RADIOPHARMACEUTICAL INJECTION AND PREPARATION UNIT

ALL **ENERGIES**

SPECT **PET**

OPTIONS

- Therapy Application
- Radiopharmacy software interface
- COFRAC (French Accreditation Committee) preset dose calibrator
- Peripheral injection with RIS

Posijet® is a compact, self-contained, radiation protected radiopharmaceutical (high-energy) fractionating and injection unit that **collects, measures and injects** the required patient dose in maximum safety and reliability conditions for both the user and the patient, while guaranteeing the integrity of the radioactive drug. Posijet® supports all multi-dose fluorinated tracers (**^{18}F**) including ^{18}F-FDG, ^{18}F-DOPA, ^{18}F-CHOLINE, ^{18}F-FNA, ^{18}F-PSMA, etc. and also tracers labelled with **^{68}Ga**, as well as Ammonia labelled with **^{13}N** for cardiac PET examinations.

With its new "Therapy" application, it is also able to perform slow administrations in 30 minutes, for Vectorised Internal Radiation Therapy (VIR) treatments with **^{177}Lu** labelled radiopharmaceuticals (^{177}Lu octreotate or ^{177}Lu DOTA-TATE, ^{177}Lu-PSMA-617, etc.). It is also possible to perform fractionating and intravenous administration of **^{99m}Tc-labelled** SPECT radiopharmaceuticals.
For routine diagnostic applications, Posijet® features a very fine sampling capacity of 100 µL of the stock solution with an average dose preparation time of 50 seconds and an accuracy of around 2 %. The average injection time, including rinsing operations, is less than 1 minute 30 seconds.

1 | Manual injection plunger **2** | Dose calibrator for real-time measurement of radiopharmaceutical dose **3** | Secure automatic preparation and controlled injection system in automatic or manual mode **4** | Touch screen for control and command **5** | Secure shielded door accommodating the multi-dose vial in its shielded transport container **6** | Air bubble detector **7** | Saline solution holder connected to the mother solution kit **8** | Removable spill containment tray **9** | Mains outlet **10** | Motorised rotary assistance control (independent battery) **11** | Bar code reader for kit traceability **12** | Printer for customisable injection and quality control reports **13** | Ethernet connection if no Wifi **14** | Castor braking system **15** | Optional RIS (Remote Injection System) allows preparation and packaging of a patient dose for manual injection **16** | Maintenance hatch

FOCUS ON FEATURES

GENERAL

- **The user-friendly and intuitive user interface** is controlled by a touch screen.
- **The application** is available in a choice of languages: French, English, Russian, Chinese, German and Italian.
- **The units of measurement** can also be set as required: MBq or mCi
- **Operating time** of 8 hours on battery, possibility of mains operation
- **Charging time:** 3h
- **Lexan trim** is customisable in a choice of colours and patterns.
- **Radiation protection** guarantees a dose rate of less than 25 µSv/h at 5 cm from the walls during preparations, when the operator is standing behind the control console for ^{18}F stock solution activities of 24.5 GBq when the vial is held in a 30 mm lead pot and 94.8 GBq when the vial is in a 30 mm tungsten pot.
- **Connectivity:** Wifi and Ethernet
- **Idle mode** allows the dose calibrator chamber to be closed at the end of the day.
- **The web application** allows monitoring and control over: the schedule of the day's injections, the follow-up of the injections carried out as well as the exportable log in CSV or XML format, the traceability of the activity concentration checks, the list of drugs, management of the various isotopes (creation, deletion, addition), the management of the users as well as their rights (simple users, administrators), the quality control log, etc.

Download the product data sheet at lemerpax.com

MEASUREMENTS & DOSE PREPARATION

- **Settings and calibration** of the different isotopes and constancy sources are accessible and can be carried out by radiophysicists or service personnel as well as certified organisations, in order to check or adapt Posijet® in accordance with the requirements and practices of the services and their developments.
- **The real-time update of the stock solution information** on the application screen (minimum dose, activity concentration, vial volume and total activity of the vial) allows for permanent follow-up and control of the users.
- **The dilution**, available at any time during the cycle, guarantees the use of 100 % of the stock solution. It can be customised (target volume set point selected by the user) or optimised (target volume set point calculated automatically by the injection unit), and allows the concentration of the vials to be adapted for improved user comfort and facilitates the collection of the end-of-vial activity.
- **The "Mixing" function,** when activated, allows the radiopharmaceutical drug to be homogenised with saline solution following high dilution.
- **The automatic** vial **pressure adjustment function** was developed to improve the accuracy of patient dose preparation.
- **The prescription calculation** allows to automatically determine a prescription based on weight, surface area or BMI, etc.
- **The patient schedule** according to the activity of the stock solution vial, allows to optimise the use of the vials and to view the forecast consumption of activity in order to anticipate the unloading and loading of the next vial.
- **The "Chrono" function** allows the preparation of the patient dose in advance (from 0 to 10 minutes max). Optimal anticipation function during the day when performing simultaneous patient transfer actions under the PET camera, successive injections, as well as deperfusions.
- **The end-of-vial measurement** takes a total sample of the residual activity present in the vial in order to optimise the sampling of the last doses.

INJECTIONS

- **The automatic venting** upon start-up as well as the automatic inter-patient venting on all kits, ensure that no air bubbles can be injected into the patient.
- **The "Test vein" function** before a dose preparation, ensures a verification of the venous line before injection in order to anticipate any possible problem relating to obstructed veins for example.
- **Three injection profiles** (configured according to the application required by the service) are available to take into account the injection location as well as the catheter used to prevent the risk of extravasation.
- **Automatic or manual injection** with plunger.
- **Rinsing** after the injection can be set in volume from 10 to 30 mL directly by the user.
- **A force sensor** is located in the sampling head with an injection rate control and a visual gauge on the application screen, allowing the user to vary the injection speed.
- **The air bubble detector** checks for air bubbles in real time and alerts the user if necessary.
- **Injection reports** in the form of labels with configurable information and size are issued at the end of each radiopharmaceutical dose administration.

SAFETY & CONTROL

- **Contextual help** is available throughout the user cycle to assist users in their handling operations.
- **The loading aid** is presented in the form of a photo slide show for each step and the positioning of the various accessories required to load the machine.
- **The activity concentration control** allows to check the information of the stock solution (configurable, duration 1 min 30) and increases the accuracy of the samples.
- **The barcode reader** for mother solution kits and patient kits ensures the traceability of the consumables used.
- **Management of the volume of the NaCl** bag necessary for venting, rinsing and diluting prevents insertion of air into the system and allows the user to anticipate the bag change.
- **The rinsing function of the stock solution kit** at the end of the vial allows the machine to be unloaded without any activity in the tubing.
- Daily and regulatory **quality checks** of the dose calibrator ensure reliable measurements.
- **The interoperability** between Posijet® and the radiopharmacy software ensures complete and secure traceability of information concerning radiopharmaceuticals and patients. The software compatible with this two-way communication interface is: Venus (Nicesoft), PharmaManager (Softway Medical), Gera (Thélème) and Xplore (EDL). The Sectra RIS (Sectra) and IBC NM (Comecer) software via the HL7 protocol feature a two-way connection for the reception of patient worklists by the LPDose software and the return of prepared doses. As for the other PACS via DICOM protocol, they can also be interfaced with the LPDose software, in one direction, and allow the simple reception of appointments or patient worklists.
- **The prepared dose** is controlled by a configurable system with threshold rules determined by the service, according to specific applications. For example, patient doses for paediatric use may be subject to a stricter threshold rule depending on the age of the patient. A colour code as well as warning messages in case of over- or under-dosing in relation to these thresholds, guarantee conformity between the prescription and the patient dose.
- **Logging**, or real-time recording of data for monitoring, creates log files stored in the machine, which are required for analysis in the event of a malfunction.
- **Remote control** is possible and allows problems to be solved without the need for a technician to be dispatched.
- **An air bubble detector** and a **force sensor** ensure safe injections.

TOOLS & DOWNGRADED CASES:

A menu in the application has been specially designed and made available to users to allow many features to be activated outside the nominal usage cycle. The aim of this programme is to help and support users and thus guarantee the continued use of the Posijet® preparation and injection unit regardless of the uncertainties of patient organisation and management (late delivery of radiopharmaceutical, late or cancelled patient, higher dose required, delayed administration, etc.) as well as potential malfunctions that may occur during a day of PET activity. Therefore, a dose that has already been prepared but cannot be injected into the patient, for example, can be reallocated to another patient of a similar weight or diverted into a specific bin without interfering with the use of the injection unit.

The activity simulator developed by Lemer Pax's R&D team allows the service teams to handle and operate the device in real conditions without unnecessary exposure since there is no activity.

ADAPTATION 13N-AMMONIA:

Building on its **collaborative work** with user services worldwide, Lemer Pax once again provides technical expertise for **innovation** by developing in 2019 a **Posijet® programme for fractionating and administration of the ^{13}N-Ammonia radiopharmaceutical**. Mainly indicated for cardiac PET diagnostic imaging, when coronary artery disease is suspected or developed, this **new specific application** makes Posijet® the **first preparatory injection unit capable of handling ^{13}N**. Despite an extremely short half-life (10 minutes), Posijet® accurately prepares the patient dose and administers it according to the strict protocol required for the success of this specific PET examination.

Exchanges between the **Geneva University Hospitals (HUG)** and the Lemer Pax development teams have enabled the routine use of ^{13}N-Ammonia dose preparations with Posijet® since 2019. The hospital currently performs approximately 1 600 examinations per year, while ensuring a considerable reduction in exposure for medical staff. Collaboration with the **University Hospital of Zurich** from 2020 onwards, has allowed the Posijet® Ammonia version to be further developed in two areas: optimisation of the accuracy of patient dose preparation and automatic injection from the Posijet®, in accordance with the restricted timing criteria imposed by the administration protocol for this examination.

THERAPY APPLICATION

Theranostics is a new medical approach aiming to promote simultaneous development of diagnostic and therapeutic aspects in nuclear medicine, and visualise for improved cancer treatment by associating a diagnostic test and an adapted targeted therapy.

In this new context, Lemer Pax has invested in Research and Development to include Posijet® in this theranostic use, thus opening up parallel access to **diagnostic PET injections** and **therapeutic VIR injections** in secure conditions. With the launch of new ^{177}Lu labelled molecules on the market, such as **^{177}Lu-DOTATATE** for the treatment of inoperable neuroendocrine tumours, as well as **^{177}Lu-PSMA** for specific prostate indications, the Lemer Pax teams aimed to support these developments by offering healthcare professionals the opportunity to improve their administration methods for these new radiopharmaceutical drugs with an **ultra-secure** industrial solution adapted to these **Vectorised Internal Radiation therapy (VIR)** treatments.

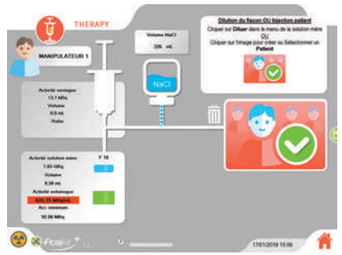

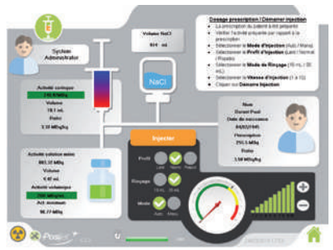

This new development is mainly focused on **complete and secure automation** of radiopharmaceutical administration, while **respecting the constraints of pharmacological protocols**. The "Diagnosis" and "Therapy" menus feature the **same graphical structure** of the application, however, they are differentiated by a distinct coloured frame to improve user **ergonomics**. In order to preserve the exposure gain for users, the single-dose vial of VIR radiopharmaceuticals and its shielded transport container are positioned directly in the Posijet® regardless of the selected application: "Diagnosis" or "Therapy". The Therapy injection menu includes **specific radiopharmaceutical checks (concentration and radioisotope verification) and kits** to ensure safe administration.

In accordance with the administration conditions required in the Summaries of Product Characteristics (SCP) of radiopharmaceuticals, the user only enters the total administration time required and the rinse volumes. The Posijet® will automatically execute the recorded protocol of the drug, guaranteeing an **injected dose accuracy of more than 99 %** of the prescription. With the dose calibrator integrated in Posijet®, the operator can monitor the activity administered in real time, in addition to the remaining injection time. The injection unit also allows **partial administration** of single-dose vials to suit individual patient prescriptions. **An injection report in the form of labels** with configurable information and size is issued at the end of each radiopharmaceutical dose administration.

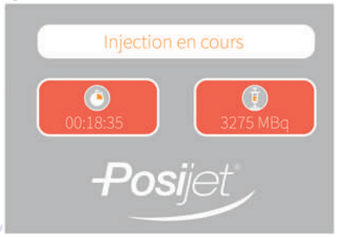

In addition to the intuitive interface of the Posijet® integrated screen, a **remote injection monitoring interface** is available, combining information on injected activity, remaining administration time, as well as alerts in case of patient problems. This interface is accessible via the Posijet® embedded website and therefore available on the service control screens.

FEATURES

General

Languages: French, English, Italian, Russian, Chinese. Other on request.

Units: Bq/MBq or Ci/mCi

"Diagnosis" application: ^{18}F - ^{68}Ga - ^{13}N- ^{99m}Tc

"Therapy" application: ^{177}Lu

Insertion of the stock solution: shielded transport supplier pot fitted directly

Max. vial volume: depending on vial packaging adaptation

Accessibility to the injection unit internal data: built-in web site to monitor use of the device in real time and consultation of QCs (remotely on PC and tablet)

Battery autonomy management: indicator cartridge permanently displayed on screen and indicator light on control panel

Injections

Purge of system and kits: automatic and manual purging

Injection modes: automatic or manual, can be changed during injection

Test vein before injection: yes, with configurable NaCl volume

Injection rate management: 3 rates can be selected and configured:
"slow" (approx. 25 mL/min)
"normal" (approx. 33 mL/min)
"fast" (50 mL/min)
depending on the various catheters (yellow, blue, pink), and to take into account the specific features of the patient injection site. The speed can be changed during injection (within the selected profile).
The rate is visible during injection.

Possibility of making 2 simultaneous injections: yes, with the RIS option

Total injection volume with rinsing: 10 mL injection dose + rinsing volume configurable from 10 to 30 mL

Details concerning rinsing with NaCl: Rinsing volume as required for each injection from 10 to 30 mL after injection. Possibility of other rinsing operations in downgraded mode if necessary.

Injection report: Label printout (2 possible dimensions) after validating the configurable injection, info, number and size.
Possibility of printing out more labels at any time.

Injection site validation: yes

Measurements & dose preparation

Max. activity of a patient dose: 500 MBq (configurable value)

Integrated measuring instrument: Scintidose dose calibrator always operational without warm-up time

Check report: customisable label + consultation possible on web site

Dilution: yes, function available at all times, with possibility of diluting as required or according to the device recommendations (always with a safety limit taking into account the total permitted volume of the vial)

Vial management: automatic vial pressure adjustment function to improve patient dose preparation

Maximum vial activity concentration: max 3 GBq/mL

End-of-vial management: dilution possible and automatic measurement of remaining activity

Patient dose measurement method: the activity sampled is measured directly in a 10 mL syringe filled up with saline solution to obtain identical measurement geometry for each measurement.

Max. volume of the sampling syringe: 10 mL

Minimum radiopharmaceutical sampling volume: 100 µL

Deferred preparation: yes, possibility of preparing the dose 0 to 10 min before the required injection time with automatic adjustment of the dose according to the decay

Calculation method: automated dose calculation according to the weight to be configured

Injection schedule: yes, to view the number of injections possible and change the patient order if necessary to optimise the vial and/or reassign a prepared dose + possibility of cancelling a patient.

Tools & downgraded cases

Management of a non-injectable prepared dose: reassign the dose to another patient using the schedule or redirect the dose to the portable bin

Customer support: yes, remote maintenance + hotline
Real-time internal data log files saved for diagnosis in case of problem

Management of downgraded modes: yes, numerous downgraded modes are proposed to ensure that you never remain blocked:
"Utilities" menu - one tab is dedicated to downgraded actions
Fully downgraded mode with a "posi block" system allowing manual sampling

Safety & controls

Removing the flip off and hygiene of the septum: removal and manual disinfection of the septum after fitting the pot in its housing

Check of vial activity: check of the vial activity concentration. The measured sample is then put back in the vial.

View of vial activity: permanently on application screen

Safety & dose thresholds: Max. 2 configurable doses (one for adults and one for children) protected by password.
Colour code to help the operator assess reliability of the dose prepared with respect to the prescription with admin password setting in case of over- and under-dosing.

Injection safety features: Built-in air bubble detector.
Force detector to stop the injection in case of back-pressure.

Interoperability: RIS or radiopharmacy software + DICOM

Compatibility with the following software: Venus, Pharma2000, Pharma Manager, Gera, DICOM protocol, HL7 Protocol (IBC NM, SECTRA, etc.) and others on request

RIS connection type: one-way or two-way wifi or ethernet

Software wizard: Complete wizard: context help permanently available when using the device + photos for the loading process as well as complete step by step help for the user

NaCl bag management: yes, with alert when replacement required (alert volume can be configured).
Several bag volumes can be configured.

Traceability: each kit is canned before being positioned, thereby ensuring rigorous traceability in case of incident

Built-in safety on the kits: bionector - mother solution kit
non-return valves - patient kit
bubble trap - patient kit

Medication integrity: 0.22 µm filter at patient kit output guarantees that the medication injected in the patient is sterile

Rinsing of stock solution kit after use: yes

Paediatric design

REGULATORY FRAMEWORK

The Posijet® preparation and injection units meets the requirements of **EU regulation 2017/745** as a **Class IIb medical device**. Electromedical device, compliant with **EN 60601-1:2006 (+ A1/2013)** for general safety requirements, **EN 60601-1-2:2015** for electromagnetic compatibility, **EN 60601-1-6:2010 (+ A1/2015)** and **EN 62366: 2015 (+ A1/2020)** for application of usability engineering to medical devices.
The control software for the LPDose dose calibrator meets the requirements of **EN 62304:2006 (+ A1/2018)** for the software life cycle process. It is equipped with the necessary safety features for integration into a hospital network and is GDPR compatible. The Scintidose dose calibrator integrated in Posijet® meets the requirements of **EU regulation 2017/745** as a **Class I medical device** for its measurement function. It features inspection functions regulated by the **French decree of 25 November 2008** and **international standard IEC 61948-4**. Posijet® is also **certified for paediatric use.**

Calibration and Presetting:
Factory calibration of ^{18}F and ^{68}Ga for the 10 mL syringe package (Posijet® dose measurement conditions) can be integrated into the software as required by the service. The Posijet® preparation and injection unit can also be calibrated on site by the Medical Physics Service of the hospital. Calibration by a certified body can be carried out in accordance with the requirements of the **COFRAC ISO 17025 accreditation standard** as an option.

CONSUMABLES

Patient kit
Ref: POSIKIT 2

Mother solution kit
Ref: POSIKIT 1B

CHARACTERISTICS

General

Overall dimensions:
L 616 x D 932 x H 1 261 mm

Weight: 380 kg

Frequency: 50/60 Hz

Supply voltage: 110 V - 240 V

Power supply: mains or battery

USB : yes

Screen type: touch screen

Shielding thickness:
25 mm around the sampling syringe
12 mm to 16 mm around the shielded drum of the radiopharmaceutical solution

Battery life: 8h

Recharging time: 3 hours

Outfitting:
15 colours and patterns to choose from possibility to integrate the service's logo

Presence of a bin:
Specific 20 mL syringe shield

Operator protection during injection:
shielding by injection unit

List of radioisotopes claimed by the manufacturer:
^{18}F (all fluorinated tracers: FDG, FNA, FDOPA, FCHOLINE, etc.)
^{13}N
^{68}Ga

Built-in measuring instrument:
Scintidose dose calibrator
always operational without warm-up time

Measurement accuracy: +/– 2%

Quality controls: Auto programme of daily checks: zero, background noise, high voltage and shift + linearity, repeatability and reproducibility checks accessible via specific tabs

Motorised assistance: Motorised assistance with independent battery power supply, one-hand rotary control, progressive speed variation up to 2 km/h, forward and backward movement.
Automatic switching to standby if not used for 5 min or by pressing the special switch located on the machine control panel.

Manual operation: possible at all times

Brakes: by foot control

Accessories & Consumables

Consumables:
POSIKIT 1B mother solution kit
POSIKIT 2 patient kit

Accessories: top + bottom guide cones to guarantee perforation of the vial and kit connections

Certifications: Complies with EU regulation 2017/745 EC Class IIb medical device by notified body (0459)
EN 60601-1:2006 (+ A1/2013)
EN 60601-1-2:2015
EN 60601-1-6:2010 (+ A1/2015)
EN 62366: 2015 (+ A1/2020)
EN 62304:2006 (+ A1/2018)
Complies with the French decree of 25 November 2008
Complies with international standard IEC 61948-4
Complies with EU regulation 2016/679 (GDPR)
COFRAC calibration service on request (ISO 17025)
Certified for paediatric use

Maintenance contract: yes

Radiation protection:

Maximum radioactivity that can be handled to obtain a dose rate less than 25 µSv/h at 5 cm from the walls*

Radionuclide	Maximum radioactivity that can be handled
^{18}F	24.5 GBq if the source is in its 30 mm lead transport pot 94.8 GBq if the source is in a Posisafe® 30 mm tungsten pot

Calculation conditions: the user is positioned behind the Posijet® control panel

Package

Package dimensions:
L 850 x D 1 500 x H 1 580 mm

Package weight: 520 kg

Ref.: 00019530-CALPosijet® with calibrated dose calibrator
00019530-ET Posijet® with calibrated dose calibrator

Download the product data sheet
at lemerpax.com

EFFECTIVE DIMENSIONS (mm)

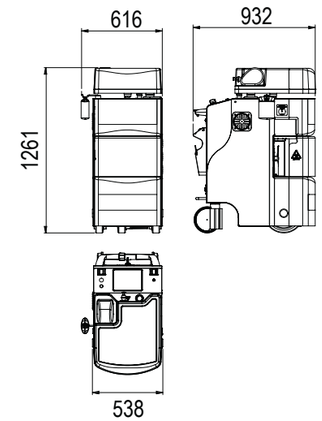

Paediatric version

AVAILABLE COLOURS

Dark blue | Light blue | Light grey | Yellow | Lilac | Orange | Pink | Red | Light green | Dark green | Old pink | Purple

*Regulations in ASN Guide No.32 "In vivo nuclear medicine facilities: minimum technical rules for design, operation and maintenance"

OUR VISION FOR DESIGN

Epijet® is the first automatic injection unit for ictal SPECT, and was designed to meet the needs of both **radiation protection** and **rapid injection of the cerebral infusion agent** necessary for the **precise localisation of epileptogenic foci** before surgery. This injection unit is the result of **an active collaboration between Dr Setoain** (Hospital Clinic de Barcelona) and Lemer Pax, **combining business and technical expertise** to obtain an **innovative solution** adapted to this specific diagnostic examination.

EPIJET®

QUICK INJECTION UNIT FOR ICTAL SPECT

LOW & MEDIUM **ENERGY**

SPECT

Download
the product data sheet
at lemerpax.com

OPTIONS

A remote control can be added as an option to the injection unit. This accessory consists of a **screen displaying the injection unit controls**, simultaneous **control buttons** for launching an injection and a **USB port** for exporting injected dose data. The link between the remote control and the injection unit is wired to secure the communication between the two devices.

REGULATORY FRAMEWORK

The Epijet® injection unit meets the requirements of **EU regulation 2017/745** as a **class IIb medical device**. Electromedical device, compliant with **EN 60601-1:2006 (+ A1/2013)** for general safety requirements, **EN 60601-1-2:2015** for electromagnetic compatibility, **EN 60601-1-6:2010 (+ A1/2015)** and **EN 62366: 2015 (+ A1/2020)** for application of usability engineering to medical devices. The control software for the LPDose dose calibrator meets the requirements of **EN 62304:2006 (+ A1/2018)** for the software life cycle process.

The Epijet injection unit® is a **medical device** designed for **rapid** and **radiation protected administration** of a **radiopharmaceutical drug**, also known as **^{99m}Tc-HMPAO** or **^{99m}Tc-ECD cerebral infusion agent**. It is used in the context of **neurological activity** for patients suffering from epilepsy for whom an ictal SPECT examination is prescribed in order to precisely localise epileptogenic foci prior to any surgical intervention. With its swivel castors, the injection unit can **be easily and quickly positioned in the cubicles** or injection rooms in which the patients are installed until the epileptic seizure occurs. The preparation of the radiopharmaceutical must first be carried out in a shielded hot cell adapted to the 140 keV gamma radiation emitted by the ^{99m}Tc radioisotope, before being positioned in the injection unit via a 4 mm lead **shielded cassette** which ensures adequate radiation protection for the operator. The patient is then connected to the Epijet® injection unit until the seizure occurs or the radiopharmaceutical expires. The operator can **trigger the injection** in **two ways**, either **directly from the control panel** on the injection unit or by **remote control** (optional) which allows for greater **speed of execution, optimisation of user radiation protection** and greater **respect for the patient's privacy**. To ensure **a very high precision of the injected dose**, Epijet® automatically adapts its injection thresholds with the patient's prescription, also taking into account the radioactive decay of the radiopharmaceutical in real time, which allows the user **to be totally available for patient monitoring**. The **administration time of the infusion agent is less than 5 s** and can be easily adapted by the operator.

FOCUS

[**1**] **The control screen** incorporates the control software. This software allows the user to identify a dose, associate a patient with it and check all the data entered to activate the injection. This software automatically adapts the amount of infusion agent to be injected according to the decay of the radiopharmaceutical during the waiting time before the epileptic seizure.

[**2**] **The quick control panel** is designed to physically control the device with two simultaneous injection buttons and an injection unit ignition button. A USB port is also available to allow the export of data corresponding to the injected dose.

[**3**] **The two-wheel steering** ensures extreme manoeuvrability of the injection unit.

[**4**] **The** 4 mm lead **shielded cassette** holds the entire injection kit including the 10 mL syringe [**5**] containing the prepared dose and the 5 mL kit rinsing syringe [**6**]. These two syringes are connected to a manifold of taps [**7**]. The cassette is positioned vertically in the injection unit.

[**8**] **A locking system** allows secure access to the prepared dose during the waiting phase.

[**9**] **The software screen** allows you to create a new patient and the dose prepared for an injection.

[**10**] **User screen** when injection is available. The decay of the radiopharmaceutical and the time remaining before expiry are updated automatically.

CHARACTERISTICS

General
Overall dimensions: L 542 x D 646 x H 1 407 mm
Shielding thickness: 4 mm of lead
Weight: 140 kg
Max. syringe volume: 10 mL
Dose accuracy: +/- 5 % of activity prescribed
Classification: Class II Medical Device
Average injection time of the agent: ^{99m}Tc-HMPAO & ^{99m}Tc-ECD
Maximum activity in the injection syringe: < 5 seconds
Maximum volume of agent injected: 3 000 MBq
Maximum volume of agent injected: 8 mL
Average activity injected: 925 MBq
Package
Package dimensions: L 1 000 x D 900 x H 1 720 mm
Package weight: 260 kg

Software functions

Embedded software:
- Simplified creation of patient and prepared dose
- Two pre-programmed radiopharmaceuticals (^{99m}Tc-HMPAO, ^{99m}Tc-ECD)
- Automatic decay control
- Automatic expiry control according to the radiopharmaceutical (4h / ^{99m}Tc-HMPAO, 8h / ^{99m}Tc-ECD)
- Multilingual application (English, French, Spanish)
- Export of injected dose information on USB drive
- Standard settings (time, brightness, etc.)

Certifications:
Complies with EU regulation 2017/745
EN 60601-1:2006 (+ A1/2013)
EN 60601-1-2:2015
EN 60601-1-6:2010 (+ A1/2015)
EN 62366: 2015 (+ A1/2020)
EN 62304: 2006 (+ A1/2018)

Ref.: 00026011 Epijet® injection unit

Ref.: 00026191 Remote control screen for Epijet® (remote control)

EFFECTIVE DIMENSIONS (mm)

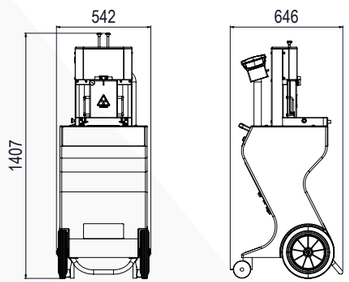

EXTRACTION SYSTEM

ARTICULATED EXTRACTION ARM FOR AEROSOL AND RADIOACTIVE GAS CAPTURE

LOW & MEDIUM **ENERGY**

SPECT

This articulated extraction system is dedicated to the **capture of ^{99m}Tc or ^{133}Xe labelled aerosol residues** used during **lung ventilation scintigraphic examinations.** With a **radius of action of 1.5 m** and its **three axes of rotation**, it is easy to reach the patient in any position, sitting or lying down. The large, transparent PMMA chamber is positioned over the patient's face for the evacuation of any radioactive molecules that may escape from the patient's nose or mouth during oral inhalation of the radiopharmaceutical. It also facilitates visual control of the nose clip and the correct positioning of the mouthpiece during the entire operation. In order to adapt to any room or ventilation space, a **wall or ceiling connection** is available.

On the wall-mounted bracket, the arm is equipped with a motor and a fan with **variable speed** extraction equipped with **active carbon filtration** to trap radioactive residues and avoid any dissemination in the service or contamination of the nursing staff. It is also possible to regulate the extraction rate during use by means of a variator on the extraction arm.

CHARACTERISTICS

General	
Radius of action: 1,50 m	
Tube diameter: 75 mm	
Diameter of evacuation duct to be supplied: 125 mm	
Component parts: - 1 wall-mounted bracket with on/off switch + variator - 1 arm with 3 hinges to extend the hood up to the patient. - 1 PMMA extraction chamber,Ø 385 mm	
Extraction rate at the nozzle: between 80 m and 180 m³/h	
Filtration and ventilation	
1 active carbon extraction filter: 300 m³/h maxi	
1 extraction fan	
Max. extraction rate: 630 m³/h	
Rotating speed: 2 125 rpm	
Sound level: 66 dBA	
Allowable temperature: 40°C	
Electrical specifications	
A power supply must be accessible from the point of attachment in the ceiling	
230 V - 4A - 50 Hz (use only from 40 Pa)	
Absorbed power: 270 W	
Absorbed current: 1,19 A	
Utilities	
Mains connection: 230 V - 4 A - 50 Hz	
Female power outlet (2 poles + earth)	
Please specify for installation: - Height of false ceiling and support material (concrete, plaster, etc.) - Connection to ventilation (ceiling)	
Ref.:	
Ceiling extraction arm for radioactive gas	**00034051**
Wall extraction arm for radioactive gas	**00034068**
Active carbon extraction filter (changed during maintenance)	**00004555**

Download
the product data sheet
at lemerpax.com

PMIP

MOBILE INTERPATIENT SCREEN

ALL **ENERGIES**

SPECT **PET**

Stainless steel side handles (available as an option)

Download
the product data sheet
at lemerpax.com

The P**MIP mobile screen** is a **large shielded screen** offering **biological protection against gamma radiation** of different energies, with five thickness options available: 10, 15, 20, 25 and 30 mm of lead. The PMIP is equipped with four swivel castors for **easy manoeuvrability** and **quick movement**, and can be used to **isolate an area**, a specific space or a bedridden patient if required. **The wide range of sizes** allows this mobile screen to **overcome all the issues related to small rooms or intermittently irradiated areas**. **Stability** is ensured by **four brakes** on the four castors and optional stainless steel lateral handles are available.

The required height from 1 154 to 1 354 mm is set in the factory, using a screw system on each leg with 50 mm intervals. **A variable height model** with a double pedal hydraulic raising/lowering system is also available as an option to allow individual use with full autonomy. The painted steel coating makes daily **cleaning easier**. In order to meet specific needs and problems, Lemer Pax Design Engineers work in collaboration with you to produce models with **customised dimensions and laminated lead glass viewing windows**, if required.

CHARACTERISTICS

General		**1 000**	**1 500**	**2 000**
Total dimensions:		L 1 140 x H 1 154 to 1 354 x D 750 mm	L 1 640 x H 1 154 to 1 354 x D 750 mm	L 2 140 x H 1 154 to 1 354 x D 750 mm
Materials:		Painted steel RAL 9010		
Operation system:		4 pivoting castors with brakes Ø 125 mm		
Dim. of radiological protection screen:		L 1 000 x H 600 x available thickness 10, 15, 20, 25, 30 mm	L 1 500 x H 600 x available thickness 10, 15, 20, 25, 30 mm	L 2 000 x H 600 x available thickness 10, 15, 20, 25, 30 mm
Height adjustable when ordering:		From 1,154 to 1,354 mm in 50 mm increments (factory setting)		
Weight / Ref. No. depending on shielding:	**(Th.10 mm)**	150 kg / Ref. 00029822	220 kg / Ref. 00029823	290 kg / Ref. 00029824
	(Th.15 mm)	185 kg / Ref. 00029825	270 kg / Ref. 00029826	360 kg / Ref. 00029827
	(Th.20 mm)	220 kg / Ref. 00029828	320 kg / Ref. 00029829	425 kg / Ref. 00029830
	(Th.25 mm)	255 kg / Ref. 00029831	370 kg / Ref. 00029832	490 kg / Ref. 00029833
	(Th.30 mm)	290 kg / Ref. 00029834	420 kg / Ref. 00029835	560 kg / Ref. 00029836
Options:				
Handling assistance:		2 aluminium handles		
Viewing:		Oculus (laminated lead glass window L 300 x H 300 x thickness from 31 to 93 mm)		
Adjustable height:		Hydraulic double pedal system (Height adjustable from 1,154 to 1,354 mm)		

EXAMPLE OF THE PRINCESS GRACE HOSPITAL IN MONACO

RESTRUCTURING AND REORGANISING A NUCLEAR MEDICINE SERVICE

THE CHALLENGE:

"FINDING SOLUTIONS TO INSTALL A NEW PET CAMERA AND DEVELOP A GALLIUM-68 PET DIAGNOSIS ACTIVITY"

During the year 2019-2020, the Nuclear Medicine service of **the Princess Grace Hospital in Monaco** had to undertake extensive restructuring work. **The main objectives were to install a new PET camera and develop a ^{68}Ga PET diagnosis activity.**

To comply with the Good Preparation Practices (GPP 2007), work had to be carried out to retrofit our radiopharmacy - covering a total area of 12.6 m^2 and including an entry pass-through - which involved replacing the original hot cells.
In addition, the medical project of the service and the hospital planned the short-term deployment of a vectorised internal radiation therapy activity using the ^{177}Lu-labelled PSMA.

For the replacement of its hot cells, **the service chose the following Lemer Pax & Medisystem equipment: a low-energy Easypharma Compact® hot cell** and, for the ^{68}Ga activity, a high-energy Medi 9000 Research 2R hot cell, in which a labelling module was installed.
Finally, in order to ensure a high degree of flexibility in the organisation of the shifts of their 2 PET cameras, the service has also acquired a second Posijet® preparation-injection unit.

THE SOLUTION:

ACQUISITION OF TWO PREPARATION HOT CELLS AND A NEW SELF-CONTAINED FRACTIONATING AND INJECTION UNIT

INSTALLATION:

ERGONOMICS AND CLOSE COLLABORATION

The class A Easypharma Compact® is dedicated to the **preparation and dispensing of technetium-based radiopharmaceutical substances.** The spacious work surface of the hot cell includes a heating unit, a stirrer and two bin compartments under the bench. This hot cell also offers the possibility of working sitting down.
With its laminar flow, the class A Medi 9000 2R Research complies with the GPP requirements **to perform a sterilising filtration step.** The hot cell can contain 2 gallium generators, positioned under the bench to reduce operator exposure. In addition to the mandatory pass-through, a side door provides quick access to the module without opening the front door, thereby minimising operator exposure. After installing the module, the work surface is still large enough to perform the dispensing operations.

Therefore, the service welcomed all the solutions chosen. The operators found the Easypharma Compact® preparation hot cell highly ergonomic for a 2 glove port hot cell, even though their previous equipment included 4 glove ports. The radiopharmacists were also extremely pleased with the Medi 9000 2R Research hot cell for **the preparation of ^{68}Ga-labelled radiopharmaceuticals.**
In addition, the Easypharma Compact® and Medi 9000 2R Research hot cells could be installed side by side, as required by the department. Lastly, the hot cells are provided with front openings for easy cleaning of the walls and work surface.

The hospital was already equipped with a **Posijet® injector** which met all the department's expectations and gave full satisfaction to the paramedics who used it every day. In the new configuration considered, one of the two preparation-injection units can work with ^{18}F-FDG while the other one injects a different fluorinated radiopharmaceutical. This alternative means that the department can increase the PET activity, while continuing to limit operator exposure.

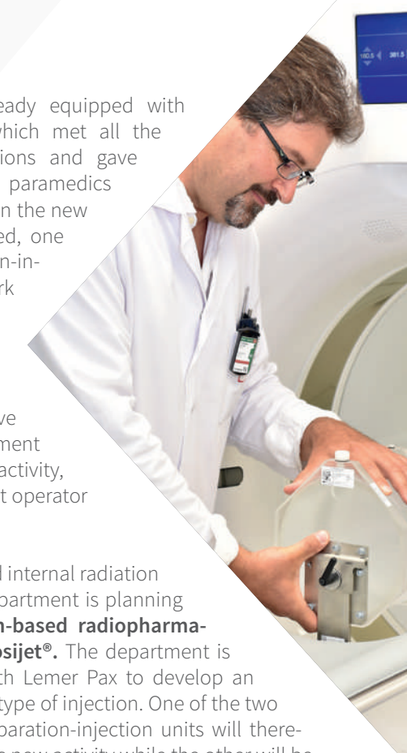

As part of the vectorised internal radiation therapy project, the department is planning **to inject the lutetium-based radiopharmaceuticals using the Posijet®.** The department is cooperating closely with Lemer Pax to develop an algorithm ideal for this type of injection. One of the two Posijet® automatic preparation-injection units will therefore be dedicated to this new activity while the other will be reserved for diagnosis examinations.

RESULTS

An increasing and diversified activity with stringent quality and safety requirements while guaranteeing the well-being and comfort of users:

- Development of a ^{68}Ga PET diagnosis activity
- Radiation protection for employees
- Easier handling of the increasing workload
- More convenient for operators

STORAGE

Needle bins

MEDISHARP 148
PRA3 & PRA10 149

Waste bins

EASYDROP 150
MEDI 64 & MEDI 64 PET 152
EASYDROP + ... 154
EASYMOVE 500 TROLLEY 156

Source storage cabinets

STORAGE DRUM 158
MOBILE SHIELDED CHAMBER 159
SHIELDED STORAGE CABINET 160
SAFETY STORAGE 162

MEDI**SHARP**

SHIELDED NEEDLE BINS

ALL **ENERGIES**

SPECT **PET**

Download
the product data sheet
at lemerpax.com

ASSOCIATED PRODUCTS

- Mediclic syringe shields
- Easyview syringe shields
- Combined transport trolley

The **Medisharp shielded waste bin** is a **mini benchtop storage cabinet** for used and contaminated **needles**, used to receive needles and syringes after manual injection of radiopharmaceuticals. The **Medisharp Low & Medium Energy** version is available in **2 shielding models**, and features a **lead thickness of 3 mm** to match radioisotopes such as **^{99m}Tc, ^{111}In, ^{201}Tl, ^{177}Lu** while the **Medisharp High Energy** version features **16 mm of lead** to ensure the necessary protection when storing waste contaminated with **^{18}F** and **^{68}Ga** for example. It is made of lead with a **stainless steel finish, for easy bacteriological and radioactive decontamination. Two openings,** full or partial, are available for improved **ergonomics** during handling.

The cover can be **fully opened** to allow the collector to be replaced and the interior of the bin to be cleaned.

The **partial opening** available in the pivoting lid allows to adapt to the size of the waste to be disposed of, **thus limiting the exposure of the users**.

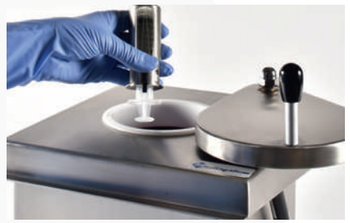

A handle on the lid makes it easy to open and close the Medisharp in either the Low & Medium Energy or High Energy model, while limiting the risk of contamination for the operator. This type of shielded waste bin can be placed on a **bench** but also on a **"combined injection transport trolley" type healthcare trolley**.

CHARACTERISTICS

General	Medisharp LME	Medisharp HE
Overall dimensions:	L 217 x D 218 x H 319 mm	L 254 x D 243 x H 349 mm
Internal dimensions:	L 163 x D 155 x H 215 mm	
Weight:	16 kg	54 kg
Radiation protection:	3 mm of lead	16 mm of lead
Packaging:		
Package dimensions:	L 230 x D 250 x H 350 mm	L 300 x D 400 x H 500 mm
Weight:	21 kg	58 kg
Ref.:	**00034047**	**00034048**

EFFECTIVE DIMENSIONS (mm)

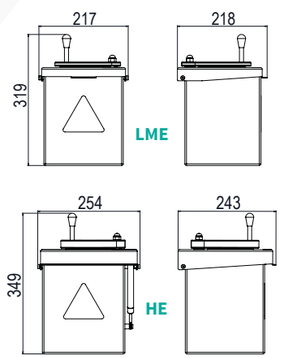

PRA**3** & PRA**10**

SHIELDED BENCHTOP BIN

ALL **ENERGIES**

SPECT **PET**

Download
the product data sheet
at lemerpax.com

The **new PRA3** and **PRA10 benchtop shielded waste bins** are 3 mm or 10 mm lead containers capable of holding **needle** and healthcare waste (PIMW) **collectors** required to **sort the waste** at the end of manual **SPECT and PET** radiopharmaceutical dose administrations. The PRA3 and PRA10 bins are ideal for **storing** used and contaminated **needles** and **syringes** as well as **vials**, and are highly **functional with their two opening systems: full opening** [**1**] to insert the bulk waste and to replace the PIMW collector or **partial opening** [**2**] with a lid on a pivot to **reduce the radiation cone as much as possible** and thus **limit the exposure of the users**.

These **innovative shielded bins** are **ergonomic** and **safe**, and feature a welded and **resistant removal pin** [**3**] to ensure and secure the removal of the needle from the body of the syringe, **avoiding any risk of pricking** for users. The 3 mm lead shield for the PRA3 and the 10 mm lead shield for the PRA10 provide the appropriate protection for the different gamma and beta radiations from the radioisotopes handled in nuclear medicine services.

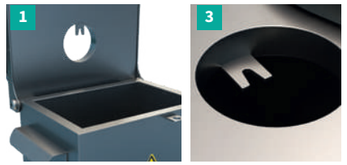

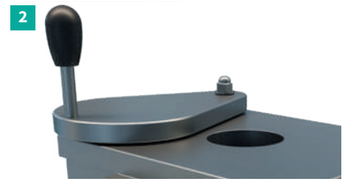

With the **anti-tipping system**, the shielded waste bins can be placed on a bench or on a "combined" healthcare trolley. Maintenance of the PRA3 and PRA10 is very simple, with a stainless steel lining and **watertight welds, disinfection** and **decontamination** even **by immersion can be carried out** without any special precautions. For absolute security, the new PRA3 and PRA10 models feature an optional key lock.

CHARACTERISTICS

General	PRA3	PRA10
Overall dimensions:	L 297 x D 200 x H 235 mm	
Max. height with handle:	H 315 mm	
Internal dimensions:	L 197 x D 132 x H 181 mm	
Diameter of partial opening:	Ø 61 mm	
Materials:	304L stainless steel mirror-polished on the outside bead blasted on the inside	
Equipment:	Needle removal pin - Pivoting lid	
Weight:	15 kg	30 kg
Radiation protection:	3 mm of lead	10 mm of lead
Compatible PIMW needle collector:	Sharpsafe 2 L ref. 4140	
Packaging:		
Package dimensions:	L 410 x D 320 x H 300 mm	
Weight:	18 kg	32 kg
Ref.:	**00039226**	**00039236**

EFFECTIVE DIMENSIONS (mm)

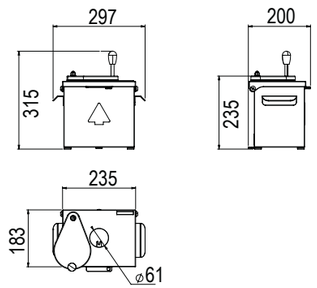

EASY**DROP**

SHIELDED BIN FOR STORAGE OF RADIOACTIVE WASTE

ALL **ENERGIES**

SPECT **PET**

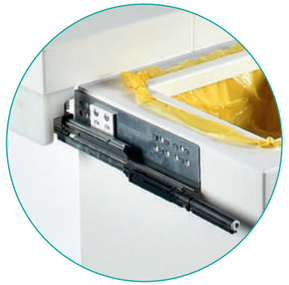

Download
the product data sheet
at lemerpax.com

The **Easydrop** shielded waste container model was designed to **facilitate the storage**, containment and **decay** of contaminated and radioactive **potentially infectious medical waste** (PIMW) in the context of **SPECT and PET activities** in nuclear medicine. **With two shielding systems available, 10 mm and 20 mm lead**, Easydrop bins are available in **5 different models** to suit all waste applications and sizes, regardless of the radioisotope concerned: storage of used kits, disposable consumables, etc., and thus provide **users** with the **appropriate protection** for the time needed for radioactive decay before waste disposal. The Easydrop **innovative sliding opening system** offers a significant improvement in the working conditions of users on a daily basis, and allows for **effortless opening**, unlike older shielded bin models with cylinders. Lockable on request (optional).

FOCUS

Easydrop's **sliding opening system** allows a **significant reduction in exposure** for users with partial opening of its shielded lid. The operators can easily control the width of the opening required to adapt to the size of the waste to be stored while reducing the radiation cone to which they are exposed to the strict minimum. Easydrop bins are made entirely of white ABS plastic, and can be fully cleaned, disinfected and decontaminated when required. Four castors: two fixed and two swivel, allow the shielded bin to be moved as required and positioned in the required room or space. Two side handles made of natural POM allow full or partial opening. They can be operated manually or with the knee when required due to the size of the waste. A PIMW bag holding frame is also provided to ensure that the bag remains secure during use. To ensure improved adaptability, the 54 L and 80 L low and medium energy Easydrop models, as well as the 54 L high energy model, are compatible with PIMW boxes to be placed directly in the waste bins.

CHARACTERISTICS

General	Easydrop LME 20 L	Easydrop LME 54 L	Easydrop LME 80 L	Easydrop HE 20 L	Easydrop HE 54 L
Radiation protection:	10 mm lead shielding over all sides.			20 mm lead shielding over all sides.	
Equipment:	4 castors (2 fixed and 2 swivel) / 2 natural POM side handles / 1 bag holding frame				
Overall dimensions:	L 462 x D 484 x H 797 mm	L 562 x D 584 x H 797 mm	L 562 x D 584 x H 967 mm	L 462 x D 484 x H 797 mm	L 562 x D 584 x H 797 mm
External dimensions with open slide:	L 462 x D 662 x H 797 mm	L 562 x D 920 x H 797 mm	L 562 x D 920 x H 967 mm	L 462 x D 662 x H 797 mm	L 562 x D 920 x H 797 mm
Internal dimensions:	L 200 x D 200 x H 500 mm	L 300 x D 300 x H 600 mm	L 320 x D 320 x H 790 mm	L 200 x D 200 x H 500 mm	L 300 x D 300 x H 600 mm
Useful volume:	20 L	54 L	80 L	20 L	54 L
Weight:	103 kg	175 kg	206 kg	180 kg	300 kg
Compatible with PIMW boxes:	No	LaboModerne Ref.: PR2451 50L 295 x 295 x 575 mm	Yes	No	LaboModerne Ref.: PR2451 50L 295 x 295 x 575 mm
Packaging:					
Package dimensions:	L 1 200 x D 800 x H 1 000 mm				
Weight:	140 kg	205 kg	240 kg	210 kg	330 kg
Ref.:	00015828	00015827	00014963	00015829	00015830

EFFECTIVE DIMENSIONS (mm)

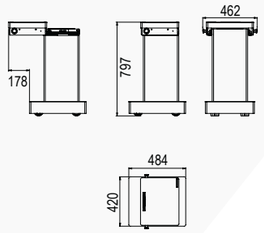

Easydrop 20 L LME-HE

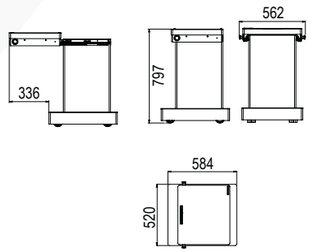

Easydrop 54 L LME-HE

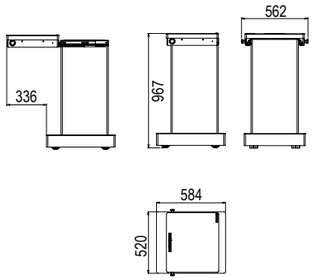

Easydrop 80 L LME for 50 L PIMW

MEDI **64** & MEDI **64 PET**

SHIELDED BINS FOR STORAGE OF RADIOACTIVE WASTE

ALL **ENERGIES**

SPECT **PET**

Download
the product data sheet
at lemerpax.com

The Medi 64 and Medi 64 PET shielded waste bins are designed for the **storage of solid waste contaminated** by **radionuclides of all energies**. In order to **facilitate the decay** and **sorting of waste according to the energy of** the different radioisotopes handled, there are **two models of bins** with **two thicknesses of lead shielding: 10 mm (Medi 64) for low and medium energy isotopes** and **16 mm (Medi 64 PET) for high energy isotopes.** With **two capacities of 32 L and 65 L** for each shielded waste bin model, the Medi 64 and Medi 64 PET **can be adapted to all the applications and needs of users** and are capable of receiving the smallest as well as the bulkiest radioactive waste present in nuclear medicine services: gloves, consumables, examination sheets, compresses, etc.

In order to **optimise the radiation protection** of users and to **avoid unnecessary handling,** these waste bin models **are compatible with the waste boxes with potential infected medical waste (PIMW)**, which can be positioned directly in the waste bin with a capacity adapted to their needs. The possibility of **partial opening** contributes to **a significant reduction in exposure** for all users in their daily tasks.

FOCUS

The Medi 64 and Medi 64 PET bins are easy **to handle** using the large stainless steel handle on each model, regardless of the selected capacity. The shielded bins are equipped with four double castors and can be moved around to facilitate their installation in laboratories, radiopharmacies, injection cubicles and examination rooms. The external painted steel finish makes it easier to clean. In order to guarantee **long-lasting** resistance, a **specific** ABS plastic **coating** was placed in the bottom of the bins at the design stage, thus limiting the corrosion caused by the decontaminating products used by the services.

The **two types of openings available**, full and partial, provide users with **an ergonomic design** and **radiation protection** adapted to their daily needs.

Full opening is possible and assisted by a secure gas cylinder system, which locks the open position to allow **effortless** replacement of the PIMW bag or box or insertion of bulky waste.

Partial opening is the most commonly used method, and simply requires turning the handle of the swivel window on the lid of the shielded bin. Opening is simple and

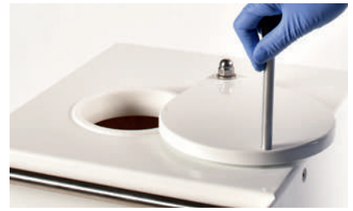

effortless and the opening amplitude is selected by the user, according to the size of the waste to be stored, while reducing full-body exposure to a minimum. Lockable on request (optional).

CHARACTERISTICS

General	Low & Medium Energy		High Energy	
	Medi 64 20 L	**Medi 64 55 L**	**Medi 64 PET 20 L**	**Medi 64 PET 55 L**
Useful volume:	32 L	65 L	32 L	65 L
Radiation protection:	10 mm lead shielding over all sides.		16 mm lead shielding over all sides.	
Equipment:	4 double castors - Stainless steel handle - Painted steel exterior and interior finish - Bag holding frame			
Overall dimensions:	L 430 x D 430 x H 880 mm	L 470 x D 470 x H 1 000 mm	L 430 x D 430 x H 880 mm	L 470 x D 470 x H 1 000 mm
Internal dimensions:	L 250 x D 250 x H 570 mm	L 310 x D 310 x H 700 mm	L 250 x D 250 x H 570 mm	L 310 x D 310 x H 700 mm
Compatible with PIMW boxes:	oui			
Weight:	152 kg	215 kg	205 kg	295 kg
Packaging:				
Package dimensions:	L 800 x D 800 x H 1 250 mm			
Weight:	170 kg	230 kg	220 kg	330 kg
Ref.:	**00034045**	**00034084**	**00034046**	**00034040**

EFFECTIVE DIMENSIONS (mm)

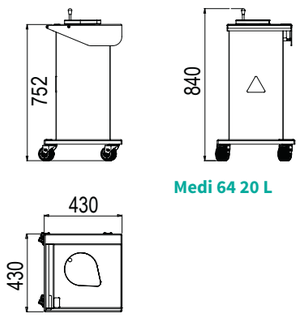

Medi 64 20 L

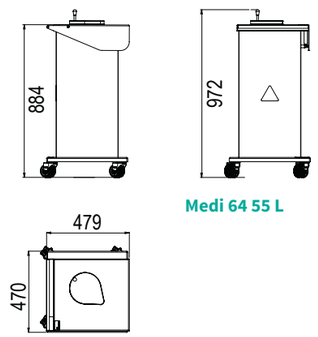

Medi 64 55 L

EASY**DROP** +

SHIELDED BIN FOR DECAY OF CONTAMINATED WASTE

ALL **ENERGIES**

SPECT **PET**

Download
the product data sheet
at lemerpax.com

The new **Easydrop⁺** shielded bin model combines the advantages of the Easydrop and Medi 64 bins. Easydrop⁺ is specially designed to **facilitate the storage**, containment and **decay** of contaminated and radioactive **healthcare waste**, and has become the new reference for all-energy shielded waste bins for **SPECT and PET activities** in nuclear medicine.
With its **innovative full opening systems, on a slide,** and **partial opening with a swivel window**, the user no longer handles heavy loads. Its two effortless opening modes provide a new level of comfort in daily activities, while maintaining appropriate radiation protection with the sources handled.
With **two available shields, 10 mm and 20 mm lead**, Easydrop⁺ waste bins are available in **5 different models and 3 specific capacities**, in order to adapt to all applications and waste sizes, regardless of the radioisotope concerned: storage of used kits, disposable consumables, etc., and to provide users with the **appropriate protection** for the time needed for radioactive decay before waste disposal. Lockable as an option and on request.

FOCUS

The Easydrop⁺ **sliding opening system** provides users with **simple, quick and effortless opening**. The operators can easily choose the width of the opening required, in order to adapt to the size of the waste to be stored while reducing the cone of irradiation to which they are exposed to the strict minimum.
The presence of the **swivel window** on the sliding cover **further improves and optimises the partial opening** for smaller waste.

Easydrop⁺ bins are made entirely of white ABS plastic, and can be fully cleaned, disinfected and decontaminated when required. **Four castors:** two fixed and two swivel, allow the shielded bin to be moved as required and positioned in the required room or space.

Two side handles made of natural POM allow to manage full and partial sliding opening systems. They can be operated manually or with the knee when required due to the size of the waste. A PIMW bag holding frame is also provided to ensure that the bag remains secure during use.

To ensure improved adaptability, the 54 L and 80 L low and medium energy Easydrop⁺ models, as well as the 54 L high energy model, are compatible with PIMW boxes to be placed directly in the waste bins.

EFFECTIVE DIMENSIONS (mm)

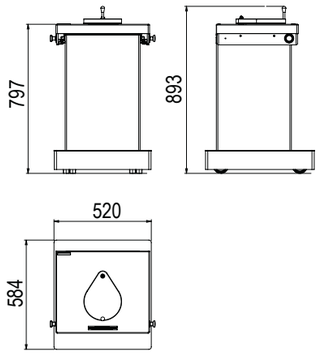

EASYDROP⁺ HE 54 L

CHARACTERISTICS

General	Low & Medium Energy			High Energy	
	Easydrop⁺ LME 20 L	**Easydrop⁺ LME 54 L**	**Easydrop⁺ LME 80 L**	**Easydrop⁺ HE 20 L**	**Easydrop⁺ HE 54 L**
Useful volume:	20 L	54 L	80 L	20 L	54 L
Overall external dimensions:	L 462 x D 481 x H 905 mm	L 562 x D 581 x H 905 mm	L 562 x D 581 x H 1 066 mm	L 462 x D 481 x H 893 mm	L 520 x D 584 x H 893 mm
Radiation protection:	10 mm lead shielding over all sides.			20 mm lead shielding over all sides.	
Equipment:	4 castors (2 fixed and 2 swivel) - 2 natural POM side handles - 1 bag holding frame - 1 intermediate opening system with swivel window				
External dimensions with open slide:	L 462 x D 659 x H 905 mm	L 562 x D 917 x H 905mm	L 562 x D 917 x H 1 066 mm	L 462 x D 659 x H 893 mm	L 562 x D 917 x H 893mm
Internal dimensions:	L 200 x D 200 x H 500 mm	L 300 x D 300 x H 600 mm	L 320 x D 320 x H 790 mm	L 200 x D 200 x H 500 mm	L 300 x D 300 x H 600 mm
Intermediate opening diameter:	Ø 115 mm				
Height of swivel window handle:	96 mm				
Weight:	106 kg	178 kg	209 kg	188 kg	305 kg
Compatible with PIMW boxes:	No	LaboModerne Ref.: PR2451 50 L L 295 x D 295 x H 575 mm	Yes	No	LaboModerne Ref.: PR2451 50 L L 295 x D 295 x H 575 mm
Packaging:					
Package dimensions:	L 1 200 x D 800 x H 1 000 mm				
Weight:	143 kg	208 kg	243 kg	215 kg	335 kg
Ref.:	**00045760**	**0004561**	**0004562**	**0004563**	**0004564**

EASY**MOVE 500** TROLLEY

MOTORISED TROLLEY FOR TRANSPORTING SHIELDED BINS

HIGH **ENERGY**

SPECT **PET**

ASSOCIATED PRODUCTS

- Easydrop 54 L HE bins
- Medi 64 PET 55 L bins
- Easydrop+ 54 L HE bins

Easymove 500 is a **motorised trolley** equipped with a hydraulic pump actuator (drawbar) designed for the **removal** and **transport**, on smooth surfaces, of **high-energy shielded waste bins used in nuclear medicine** of the Lemer Pax or Medisystem brands: models **Easydrop 54 L** and **Medi 64 (55 L).**

The Easymove 500 is **compact, lightweight, easy to use**, and ideal for **reducing** the operator **effort** required and increasing efficiency and safety, with a **maximum load** capacity of **500 kg**.
It is equipped with a **powerful** 36 V 12.8 Ah Li-Ion battery and a LED display that provides users with a variety of information as well as the ability to **adjust the** maximum travel **speed** from 3.2 to 5.3 km/h to suit specific applications. The trolley is **easily removable** and features an additional battery, for continuous operation.

Its **two large diameter** (200 mm) **drive wheels** offer **great stability** without the need for stabilisers. They are made of non-marking rubber, which provides excellent traction for an **extremely quiet** device. A switch allows to change from electric to manual mode in case of low battery. The trolley can then be used as a manual pallet truck. In order to move the unit in a narrow space, the trolley is equipped with a slow mode to allow operation with the drawbar in a vertical position at reduced speed.

CHARACTERISTICS

General
Overall length: 1 140 mm
Turning radius: 1 020 mm
Total width: 890 mm
Lifting: manual
Ground clearance in low position: 0 mm
Fork height: 125 mm
Driving system: assistance
Drawbar height in driving position: 710 mm min. / 1 185 mm max.
Travel speed with load: 4.2 km/h
Maximum slope under load: 5 %
Battery autonomy: contact us
Battery voltage and capacity: 36 V-12.8 Ah
Noise level at operator's ear: 60 dB(A)
Nominal load capacity: 500 kg
Empty weight: 146 kg
Plate between forks: L 600 x P 630 mm
Translation modes: electric strike plate
Lifting height: 115 mm
Fork width: 145 mm
Front wheels: 2 x Ø 200 x L 40 mm Rubber
Rear wheels: 4 x Ø 200 x L 60 mm Polypropylene
Travel speed without load: 5,3 km/h
Lowering speed with load: 0,1 m/s
Maximum slope when empty: 15 %
Service brake: electric latch plate
Battery weight: 3 kg
Ref.: 00040729

Download the product data sheet at lemerpax.com

STORAGE DRUM

SHIELDED DRUM FOR RADIOACTIVE WASTE STORAGE

LOW & MEDIUM **ENERGY**

SPECT

Shielded storage drums are basic and essential accessories for management of contaminated bags of potential infectious medical waste (PIMW) in nuclear medicine services. They are used on a daily basis for **decay** of these PIMW bags, which are stored in the waste room of each service. These drums allow simple and efficient identification and sorting of waste according to the half-life of the isotopes handled. The **storage** of the PIMW bags is thus **secure** and perfectly **controlled** until they are disposed of. With a **3 mm lead shielding**, these storage drums are suitable for the containment of radioisotopes used in SPECT imaging.

A sturdy stainless steel base with three or four castors (depending on the model) is available for **easy displacement of** the drum. **A crimped lock** allows it to be locked and opened very quickly and with unlimited use. The lid also has two handles for easy removal and to easily handle the drum. This makes it easier to move and transfer drums for shelf storage when necessary, for small waste rooms.

Three volumes of drums are proposed, to perfectly adapt to the space available and the waste management protocols of the services: 30, 60 and 120 L with the same shielding to maintain adequate radiation protection. The stainless steel interior finish allows for bacteriological and radioactive decontamination to be easily carried out without altering the components.

CHARACTERISTICS

General	30 L	60 L	120 L
Radiation protection:	3 mm of lead		
Overall dimensions:	Ø 300 x H 537 mm	Ø 400 x H 612 mm	Ø 486 x H 814 mm
Internal dimensions:	Ø 244 x H 490 mm	Ø 334 x H 562 mm	Ø 417 x H 764 mm
Useful volume:	23 L	50 L	105 L
Weight:	30 kg	47 kg	77 kg
Packaging:			
Package dimensions:	L 500 x D 500 x H 800 mm	L 600 x D 600 x H 900 mm	L 600 x D 600 x H 1 100 mm
Weight:	55 kg	70 kg	105 kg
Ref.:	**00034088**	**00034043**	**00036339**
Ref. of accessories:	30 L drum base with 4 castors **00034087**	60 L drum base with 3 castors **00034086**	120 L drum base with 3 castors **00035878**

Download
the product data sheet
at lemerpax.com

EFFECTIVE DIMENSIONS (mm)

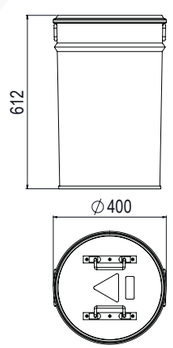

60 L drum

MOBILE SHIELDED CHAMBER

RADIOACTIVE SOURCE STORAGE CABINET ON CASTORS

ALL **ENERGIES**

SPECT **PET**

Download
the product data sheet
at lemerpax.com

The mobile shielded cabinet is a new version of the latest generation of storage systems, designed to facilitate the **storage of unsealed radioactive sources** before use as well as **sealed sources** required for quality control of dose calibrators. To adapt to all the different applications in the services and the different radioisotopes stored in the **SPECT and PET** units, **two shields thicknesses are available, 25 and 40 mm**. The cabinet features a **robust frame**, and an **overall height of 1 071 mm**, thus no need for the user to bend down, **improving daily working comfort**.

It is equipped with six double swivel castors,two of which have brakes for **greater stability**, and the large ergonomic handle makes it **easy** and convenient to **move. The cabinet is** lockable to ensure total containment of the sources stored by the service. Painted steel finishing allows for quick and easy cleaning and decontamination of the cabinet and its frame. A fixed shelf with a rim is installed under the cabinet, offering an interesting additional storage space, mainly for accessories and consumables used for the handling of sources including gloves, tongs, etc.

EFFECTIVE DIMENSIONS (mm)

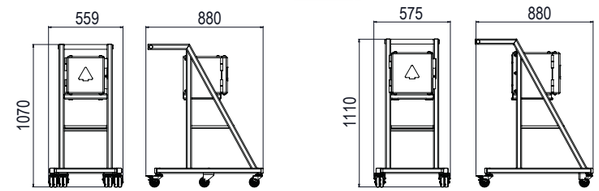

00032744 **00030565**

CHARACTERISTICS

General		
Radiation protection:	25 mm	40 mm
External dimensions:	L 880 x D 559 x H 1 070 mm	L 880 x D 575 x H 1 110 mm
Interior dimensions of the cabinet:	L 200 x D 200 x H 200 mm	
Volume:	8 L	
Weight:	200 kg	276 kg
Radiation protection:		
Maximum radioactivity that can be stored to obtain a dose rate less than 25 µSv/h at 5 cm from the walls*		
Radionuclides	Maximum radioactivity that can be stored	
^{137}Cs	121 MBq	732 MBq
^{133}Ba	32 GBq	2 731 GBq
^{131}I	1,08 GBq	7,3 GBq
Packaging:		
Package dimensions:	L 1 100 x D 800 x H 1 400 mm	
Weight:	250 kg	330 kg
Ref.:	**00032744**	**00030565**

*Regulations in ASN Guide No.32 "In vivo nuclear medicine facilities: minimum technical rules for design, operation and maintenance"

SHIELDED STORAGE CABINET

SHIELDED CABINET FOR STORAGE OF RADIOACTIVE SOURCE

ALL **ENERGIES**

SPECT **PET**

Download
the product data sheet
at lemerpax.com

LEMER PAX MODEL

Lemer Pax and Medisystem shielded storage cabinets are **secure, lockable cabinets for the containment of all-energy radioactive sources** used in conventional nuclear medicine services and PET units.
The shielded cabinets are suitable for the **storage of constancy sources**, which are necessary for quality control of activity measuring devices in shielded hot cells, such as dose calibrators, and can also be used for the **temporary containment of radiopharmaceutical stock solutions** before their use and administration to patients.

The storage of sources can be arranged as required on the **removable** stainless steel bead-blasted **shelves**, without any risk of error. The units are equipped with four height-adjustable feet to ensure **perfect stability** for all models. The interior and exterior painted steel finishes of Lemer Pax models ensure **easy maintenance** and **decontamination**. In order to adapt to all the service requirements and applications, shielded cabinets are available in a wide range of references with or without shelves, dimensions and shielding. All configurations and customised models are available further to study by our design teams.

CHARACTERISTICS

General	Medisystem
Effective volume:	**130 L**
Internal dimensions:	L 450 x D 496 x H 584 mm
Equipment:	Removable bead blasted stainless steel shelf Stainless steel protective plate in lower part Adjustable feet for stability
Finitions :	Painted steel RAL 9010/ stainless steel inside
Shielding thickness	10 mm
External dimensions with feet:	L 532 x D 563 x H 710 mm
Weight:	303 kg
Ref.:	**00037803**

MEDISYSTEM MODEL

CHARACTERISTICS

General	Lemer Pax			
Effective volume:	**8 L**	**27 L**	**36 L**	**45 L**
Internal dimensions:	L 200 x D 200 x H 200 mm	L 300 x D 300 x H 300 mm	L 300 x D 300 x H 400 mm	L 300 x D 300 x H 500 mm
Equipment:	Removable bead blasted stainless steel shelf - Stainless steel protective plate in lower part - Adjustable feet for stability			
Finish:	Painted steel RAL 9010 Int & Ext			
Shielding thickness:	25 mm	25 mm	25 mm	25 mm
External dimensions with feet:	L 323 x D 331 x H 325 mm	L 427 x D 431 x H 425 mm	L 458 x D 455 x H 600 mm	L 427 x D 431 x H 625 mm
Weight:	148 kg	286 kg	367 kg	398 kg
Ref.:	**00031727**	**00033498**	**00040255**	**00031431**
Shielding thickness:	40 mm	40 mm	40 mm	40 mm
External dimensions with feet:	L 513 x D 355 x H 361 mm	L 458 x D 455 x H 455 mm	L 458 x D 455 x H 555 mm	L 460 x D 455 x H 655 mm
Weight:	235 kg	444 kg	527 kg	610 kg
Ref.:	**00030550**	**00043501**	**00031524**	**00044866**

General	Lemer Pax			
Effective volume:	**96 L**	**125 L**	**180 L**	**125 L**
Internal dimensions:	L 400 x D 400 x H 600 mm	L 500 x D 500 x H 500 mm	L 600 x D 500 x H 600 mm	L 500 x D 500 x H 500 mm
Equipment:	Removable bead blasted stainless steel shelf - Stainless steel protective plate in lower part - Adjustable feet for stability			
Finish:	Painted steel RAL 9010 Int & Ext			
Shielding thickness:	25 mm	25 mm	25 mm	50 mm
External dimensions with feet:	L 500 x D 500 x H 705 mm	L 627 x D 641 x H 625 mm	L 705 x D 605 x H 705 mm	L 675 x D 685 x H 675 mm
Weight:	600 kg	698 kg	867 kg	1 350 kg
Ref.:	**00045656**	**00038901**	**00045657**	**00030172**
Shielding thickness:	40 mm	40 mm	40 mm	
External dimensions with feet:	L 555 x D 555 x H 755 mm	L 657 x D 664 x H 660 mm	L 755 x D 655 x H 755 mm	
Weight:	937 kg	1 067 kg	1 332 kg	
Ref.:	**00038902**	**00045658**	**00037336**	

SAFETY **STORAGE**

MODULAR AND SECURE SHIELDED STORAGE CABINETS

ALL **ENERGIES**

SPECT **PET**

The Lemer Pax **Safety Storage range of shielded laboratory furniture** is designed to provide **safety and efficiency** within the service. It is **compact and functional**, and can be adapted to all needs in terms of storage, containment and decay of radioactive sources and waste of all energies. This furniture is **extremely modular and versatile, seven different configurations** are possible and it can be installed against walls and partitions, in order to integrate perfectly into your premises and adapt to your applications.

The **robust design**, made of high quality stainless steel, allows easy and quick maintenance with the hygiene and decontamination products available in hospitals, without altering the quality of the furniture over time. The brushed stainless steel exterior finish and the **drip-proof draining system** provide an aesthetic and hygienic appearance for the various units and their work surfaces, which are suitable for all handling operations and applications.

Safety Storage units are lockable to ensure **secure and restricted access** to radioactive sources when required.

With a **maximum shielding of 25 mm of lead**, all models offer optimal radiation protection for users. All seven configurations are also available in 6 mm and 12 mm shielding to suit all laboratory requirements, size and weight constraints. The four height-adjustable feet allow the shielded unit of your choice to be stabilised and to fit in with the existing elements in the room or laboratory.

STORAGE AND **DECAY** CABINET

ALL **ENERGIES**

SPECT **PET**

Ref. 00013761-6/12/25

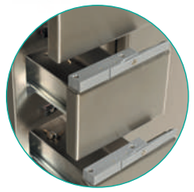

ASSOCIATED PRODUCTS

- L-Block range of shielded screens
- HBI benchtop shielded windows

The storage and decay cabinet is composed of a large work surface with a drip-proof draining system to carry out all the operations to be performed on the benchtop. It is equipped with 4 independent, lockable, shielded drawers for the storage of radioactive sources on the left side. The right-hand compartment, which can also be lockable, features two shelves, creating three separate, wide levels that can be used for decaying radioactive sources and stock solutions at the end of their use.

Download the product data sheet at lemerpax.com

EFFECTIVE DIMENSIONS (mm)

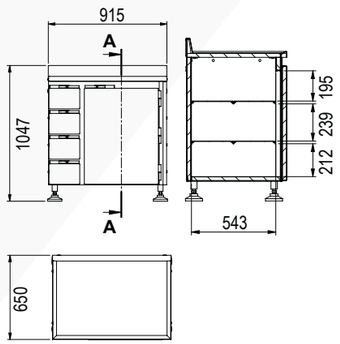

CHARACTERISTICS

General			
Overall dimensions:	L 915 x D 650 x H 1 047 mm		
Work surface dimensions:	L 855 x D 575 mm		
Safety:	Lockable drawers and compartments		
Exterior finish:	304L brushed stainless steel		
Interior finish:	Painted steel RAL 9010		
Installation:	Units to be positioned against a wall with attachment kit supplied		
Component parts:	1 304L stainless steel work surface with a rim - 4 shielded drawers - 1 shielded storage compartment with 2 removable bead blasted shelves		
Radiation protection:	6 mm of lead	12 mm of lead	25 mm of lead
Packaging:			
Package dimensions:	L 1 000 x D 570 x H 1 300 mm		
Weight:	480 kg	695 kg	1 162 kg
Ref.:	**00013761-6**	**00013761-12**	**00013761-25**

PREPARATION UNIT

ALL **ENERGIES**

SPECT **PET**

Ref. 00027217-6/12/25

The preparation unit is composed of two symmetrical and independent shielded compartments, each equipped with two shelves, thus creating three levels available for the storage of sources, consumables and accessories. A large, hygienic stainless steel work surface, perfectly smooth with anti-drip draining system, can accommodate an inclined shielded window for safe handling of benchtop operations.

ASSOCIATED PRODUCTS

- L-Block range of shielded screens
- HBI benchtop shielded windows

CHARACTERISTICS

Download the product data sheet at lemerpax.com

General			
Overall dimensions:	L 915 x D 650 x H 1 047 mm		
Work surface dimensions:	L 855 x D 575 mm		
Safety:	Lockable drawers and compartments		
Exterior finish:	304L brushed stainless steel		
Interior finish:	Painted steel RAL 9010		
Installation:	Units to be positioned against a wall with attachment kit supplied		
Component parts:	1 304L stainless steel work surface with a rim 2 shielded compartments with 2 removable bead blasted shelves each		
Radiation protection:	6 mm of lead	12 mm of lead	25 mm of lead
Packaging:			
Package dimensions:	L 1 000 x D 570 x H 1 300 mm		
Weight:	496 kg	635 kg	1 257 kg
Ref.:	**00027217-6**	**00027217-12**	**00027217-25**

EFFECTIVE DIMENSIONS (mm)

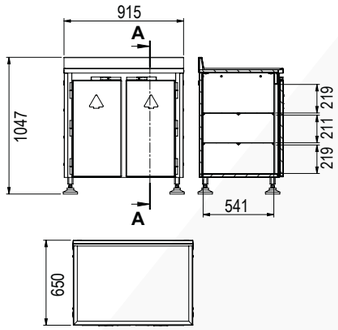

RINSING AND WASTE MANAGEMENT UNIT

ALL **ENERGIES**

SPECT **PET**

ASSOCIATED PRODUCTS

- L-Block range of shielded screens
- HBI benchtop shielded windows

Ref.00014571-6/12/25

The rinsing and waste management cabinet is equipped with a sink and an elbow-operated medical mixer tap, and represents a versatile configuration in the Safety Storage range. The hot sink, which can be connected to the service's liquid waste storage room allows contaminated water to be channelled into the radioactive decay tanks, when soaking for disinfection and decontamination of syringe shields or when washing users' hands, for example. This shielded unit also features a shielded cover on the work surface that can be used to access a PIMW collector for used needles, syringes or vials, positioned underneath. The two lockable compartments, located under the work surface, are equipped with two shelves each, providing users with ample storage capacity.

Download the product data sheet at lemerpax.com

EFFECTIVE DIMENSIONS (mm)

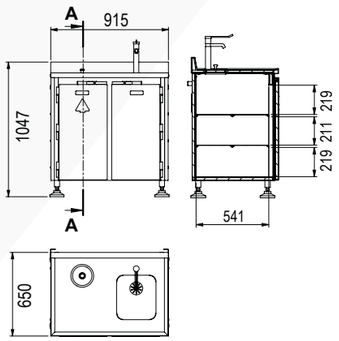

CHARACTERISTICS

General			
Overall dimensions:	L 915 x D 650 x H 1 047 mm		
Work surface dimensions:	L 855 x D 575 mm		
Safety:	Lockable drawers and compartments		
Exterior finish:	304L brushed stainless steel		
Interior finish:	Painted steel RAL 9010		
Installation:	Units to be positioned against a wall with attachment kit supplied		
Component parts:	1 304L stainless steel work surface with a rim - 1 shielded waste bin compartment with 2 removable bead blasted shelves - 1 compartment with sink fitted with a hygiene lever (NF medical elbow-operated mixer tap) and 2 bead blasted shelves (not shielded)		
Radiation protection:	6 mm of lead	12 mm of lead	25 mm of lead
Packaging:			
Package dimensions:	L 1 000 x D 570 x H 1 300 mm		
Weight:	400 kg	620 kg	1 110 kg
Ref.:	**00014571-6**	**00014571-12**	**00014571-25**

STORAGE AND **DECAY** UNIT WITH WASTE COMPARTMENT

ALL **ENERGIES**

SPECT **PET**

Download
the product data sheet
at lemerpax.com

ASSOCIATED PRODUCTS

- L-Block range of shielded screens
- HBI benchtop shielded windows

Ref.00013768-6/12/25

The storage and decay cabinet consists, on the left, of a set of four independent, lockable, shielded drawers for the secure storage of radioactive sources. On the right, a very large lockable compartment also allows the positioning of a large capacity container for potentially infectious medical waste (PIMW), for example. It provides direct access to the work surface, which is enclosed by a shielded cover, thus limiting the exposure of users during benchtop operations.

CHARACTERISTICS

General			
Overall dimensions:	L 915 x D 650 x H 1 047 mm		
Work surface dimensions:	L 855 x D 575 mm		
Safety:	Lockable drawers and compartments		
Exterior finish:	304L brushed stainless steel		
Interior finish:	Painted steel RAL 9010		
Installation:	Units to be positioned against a wall with attachment kit supplied		
Component parts:	1 304L stainless steel work surface with a rim - 4 shielded drawers - 1 shielded waste bin compartment (max. volume 60 L)		
Radiation protection:	6 mm of lead	12 mm of lead	25 mm of lead
Packaging:			
Package dimensions:	L 1 000 x D 570 x H 1 300 mm		
Weight:	453 kg	670 kg	1 137 kg
Ref.:	**00013768-6**	**00013768-12**	**00013768-25**

EFFECTIVE DIMENSIONS (mm)

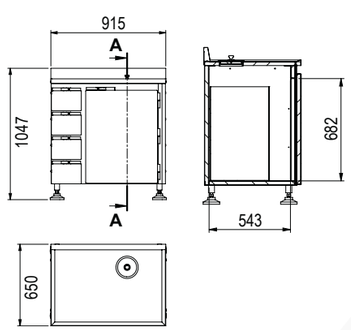

DECAY UNIT

ALL **ENERGIES**

SPECT **PET**

Download
the product data sheet
at lemerpax.com

ASSOCIATED PRODUCTS

- L-Block range of shielded screens
- HBI benchtop shielded windows

The decay unit is a compact, functional, space-saving and versatile shielded unit. It is a perfect alternative to the usual source storage cabinet, and provides a handling space with a hygienic work surface with an anti-drip draining system as well as a secure storage space on three levels for constancy sources and other radioactive preparations and stock solutions.

Ref.00014569-6/12/25

EFFECTIVE DIMENSIONS (mm)

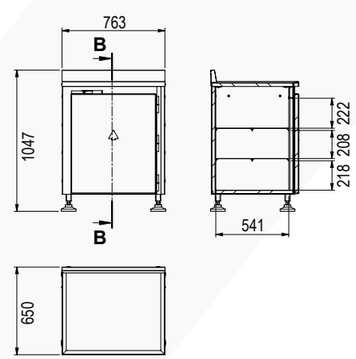

CHARACTERISTICS

General			
Overall dimensions:	L 763 x D 650 x H 1 047 mm		
Work surface dimensions:	L 757 x D 638 mm		
Safety:	Lockable drawers and compartments		
Exterior finish:	304L brushed stainless steel		
Interior finish:	Painted steel RAL 9010		
Installation:	Units to be positioned against a wall with attachment kit supplied		
Component parts:	1 304L stainless steel work surface with a rim 1 shielded compartment with 2 bead blasted shelves		
Radiation protection:	6 mm of lead	12 mm of lead	25 mm of lead
Packaging:			
Package dimensions:	L 1 000 x D 570 x H 1 300 mm		
Weight:	375 kg	563 kg	964 kg
Ref.:	**00014569-6**	**00014569-12**	**00014569-25**

STORAGE UNIT

ALL **ENERGIES**

SPECT **PET**

Download
the product data sheet
at lemerpax.com

Ref.00014568-6/12/25

The storage unit is dedicated to the secure containment of radioactive sources for services handling many different radioactive isotopes. It consists of nine independent shielded sliding lockable drawers. It is more functional than a standard storage system, thanks to its size and large storage capacity, and also offers a large, flat preparation area, for improved user comfort on a daily basis.

ASSOCIATED PRODUCTS

- L-Block range of shielded screens
- HBI benchtop shielded windows

CHARACTERISTICS

General			
Overall dimensions:	L 763 x D 650 x H 1 047 mm		
Work surface dimensions:	L 757 x D 638 mm		
Safety:	Lockable drawers and compartments		
Exterior finish:	304L brushed stainless steel		
Interior finish:	Painted steel RAL 9010		
Installation:	Units to be positioned against a wall with attachment kit supplied		
Component parts:	1 304L stainless steel work surface with a rim 12 shielded drawers		
Radiation protection:	6 mm of lead	12 mm of lead	25 mm of lead
Packaging:			
Package dimensions:	L 1 000 x D 570 x H 1 300 mm		
Weight:	488 kg	685 kg	1 103 kg
Ref.:	**00014568-6**	**00014568-12**	**00014568-25**

EFFECTIVE DIMENSIONS (mm)

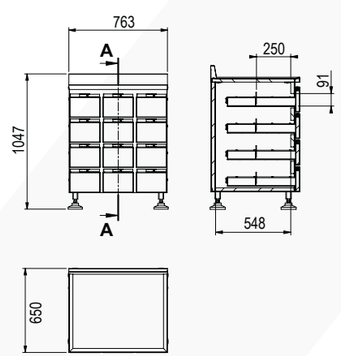

WASTE MANAGEMENT UNIT

ALL **ENERGIES**

SPECT **PET**

ASSOCIATED PRODUCTS

- L-Block range of shielded screens
- HBI benchtop shielded windows

EFFECTIVE DIMENSIONS (mm)

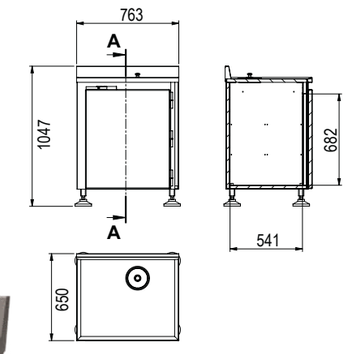

The waste management unit is a compact shielded module that can accommodate very large containers including potentially infectious medical waste containers (PIMW). Access for the insertion of contaminated waste is facilitated by a trap door positioned on the work surface, and fitted with a shielded cap. The large, resistant work surface can also accommodate the PRA3 and PRA10 shielded needle bins to facilitate the sorting of the service's various waste materials.

Download
the product data sheet
at lemerpax.com

Ref.00027212-6/12/25

All the shielded furniture models in the Safety Storage range are compatible with the L-Block range of radiation shields. The combination of these two product ranges offers users versatile and secure working and storage environments, with considerable space optimisation, while guaranteeing appropriate radiation protection for the radioactive sources handled. The great modularity of these two product families allows the creation of customised sets adapted to the specific applications of each service.

CHARACTERISTICS

General			
Overall dimensions:	L 763 x D 650 x H 1 047 mm		
Work surface dimensions:	L 757 x D 638 mm		
Safety:	Lockable drawers and compartments		
Exterior finish:	304L brushed stainless steel		
Interior finish:	Painted steel RAL 9010		
Installation:	Units to be positioned against a wall with attachment kit supplied		
Component parts:	1 304L stainless steel work surface with a rim 1 shielded waste bin compartment (max. volume 60 L)		
Radiation protection:	6 mm of lead	12 mm of lead	25 mm of lead
Packaging:			
Package dimensions:	L 1 000 x D 570 x H 1 300 mm		
Weight:	350 kg	540 kg	942 kg
Ref.:	**00027212-6**	**00027212-12**	**00027212-25**

RADIO ACTIVE WASTE MANA GEMENT

WALL-HUNG SEPARATION TOILET 172
DECAY TANKS 173
EASYRADWATER 174
NOVABAND® & NOVATUBE® 176

WALL-HUNG SEPARATION **TOILET**

TOILET FOR SEPARATION AND DISPOSAL OF RADIOACTIVE WASTE

ALL **ENERGIES**

ASSOCIATED PRODUCTS

- Novaband® & Novatube®
- Decay tanks
- Easyradwater

These **wall-hung toilets, patented** by Lemer Pax, are intended for the **safe separation** and **evacuation** of waste from patients who are mainly treated with **iodine 131**. These toilets are Installed in the shielded **irradiation** or **vectorised internal radiation therapy (VIR)** chambers, and have been specially designed to separate urine and faeces. Radioactive urine is diverted to the decay tank and non-radioactive faecal matter is evacuated into the sewer. The ergonomic shape of these wall-hung toilets and their non-porous surface is ideal for decontamination. The rim of the front part is equipped with an **anti-drip** reverse drain to avoid any risk of contamination of the premises. Two independent systems ensure safe evacuation and cleaning depending on the nature of the waste. The material compartment is equipped with a Swiss-made "Géberit" rinsing system with a volume of 9 litres. The urine compartment has a circular rinsing system activated by a push button to limit the volume of liquid sent to the radioactive decay tanks, with filtration by a strainer located before the siphon. These toilets are wall-hung to facilitate daily external cleaning as well as the maintenance of the floors of the room where they are installed. They are also **compliant with disabled standards** for perfect integration into hospital rooms.

EFFECTIVE DIMENSIONS (mm)

Download
the product data sheet
at lemerpax.com

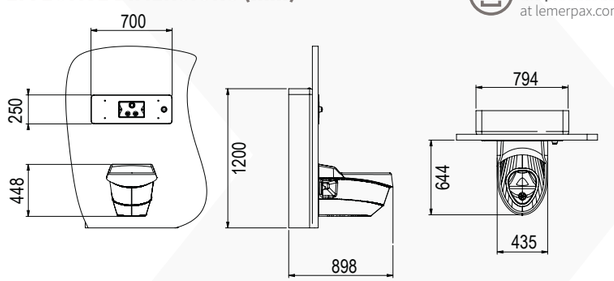

FOCUS

The main toilet body is made of high-strength reinforced polyester resin and a specific extremely resistant coating that is easy to decontaminate.

The wall-hung design allows for disinfection and possible decontamination underneath the toilet (not possible with floor-standing toilets).

The seat is made of high-strength reinforced polyester resin with an ergonomically designed rim with a white finish that can be easily decontaminated.

The toilet bowl is composed of two compartments, one for urine, and the other for faeces.

It is connected to a Swiss-made "Géberit" type of support for the evacuation of faeces.

A special 100 mm diameter siphon allows for connection to the main sewer drain.

A 32 mm diameter siphon connects the radioactive urine compartment to the collection network towards the decay tanks (supplied by Lemer Pax patent No. 1471).

DECAY **TANKS**

STORAGE TANKS FOR RADIOACTIVE WASTE

ALL **ENERGIES**

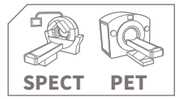

Download
the product data sheet
at lemerpax.com

ASSOCIATED PRODUCTS

- Novaband® & Novatube®
- Easyradwater

The radioactive decay tanks designed by Lemer Pax are intended for the **storage of radioactive waste** during **decay** periods before their release into the normal wastewater circuit. From the **shielded chambers** for **Iodine-131** radiation therapy and all **Vectorised Internal Radiation therapy** (VIR) treatments in general, as well as from the **laboratories, sinks, showers** and **hot toilets** of the nuclear medicine service; the size and capacity of the tanks can be adapted to meet the needs of the user services with **individual tanks from 100 to 15,000 litres**. In order to adapt to the geometry of the premises, the **design of these tanks is customised** for perfect integration and **ergonomic installation** in **premises of all sizes**. The customised manufacture of the tanks allows for a wide variety of designs in size and shape. Materials used: PE, HDPE, reinforced polyester and stainless steel offer **great resistance** and very **efficient sealing properties**, as well as **easy maintenance and decontamination**. The monitoring of the filling level of each tank is optimised by a **touch screen reporting system** and a **configurable alarm**, according to the applications and the evacuation rules defined by the services. Lemer Pax's dedicated teams ensure the design and manufacture of the complete device as well as the installation and maintenance. The **tested** and **patented** specific **secure monitoring system** for the management of radioactive **waste** is proposed to **correspond to the recommendations of the ASN** (French Nuclear Safety Authority) and **IRSN** (French Institute of Radiation Protection and Nuclear Safety) in order to guarantee long-lasting and trouble-free use. Depending on the options selected, this management unit can automate the rotation of the valves remotely, as well as monitor and display the activity measurements before discharge, without requiring manual action by the users, thus ensuring a **high level of radiation protection**.

CHARACTERISTICS

Parallelepiped tanks
Shape: flat-bottomed parallelepiped tank
Composition: radiation-resistant material, with integrated frames, manhole Ø 400 mm and 8 DN60 connections
Control interface: 2 monochrome or colour (optional) graphic touchscreens, one in the tank room and the other in the control room.
Piping and valves: made of pressure PVC DN25, DN40, DN60 and DN100. The radiation resistant valves are screw-type ball valves with gaskets.
High pressure radial pump: made of stainless steel. Used to pump out the waste for drainage or filling.
Active carbon filter, level gauge & sampling pump
100% recyclable at end of life
Impact resistant
Unrivalled seal qualities
Custom decay tanks
Other materials and shapes on request
Can be implemented in existing premises

REGULATORY FOCUS - SPECIFIC TO ^{177}Lu:

Within the framework of the **"Circular letter on the changes in the conditions of authorisation of nuclear medicine services by the ASN for the possession and use of lutetium-177",** the connection of toilets to a decay tank is recommended for all nuclear medicine services carrying out vectorised internal radiation therapy treatments with **^{177}Lu** labelled radiopharmaceuticals. The urine of treated patients should be collected for at least the first 6 hours after administration of the radioactive drug, even if the service does not have a shielded chamber.

EASY**RADWATER**

REAL-TIME MONITORING SYSTEM FOR THE ACTIVITY CONCENTRATION OF RADIOACTIVE EFFLUENT

ALL **ENERGIES**

SPECT PET

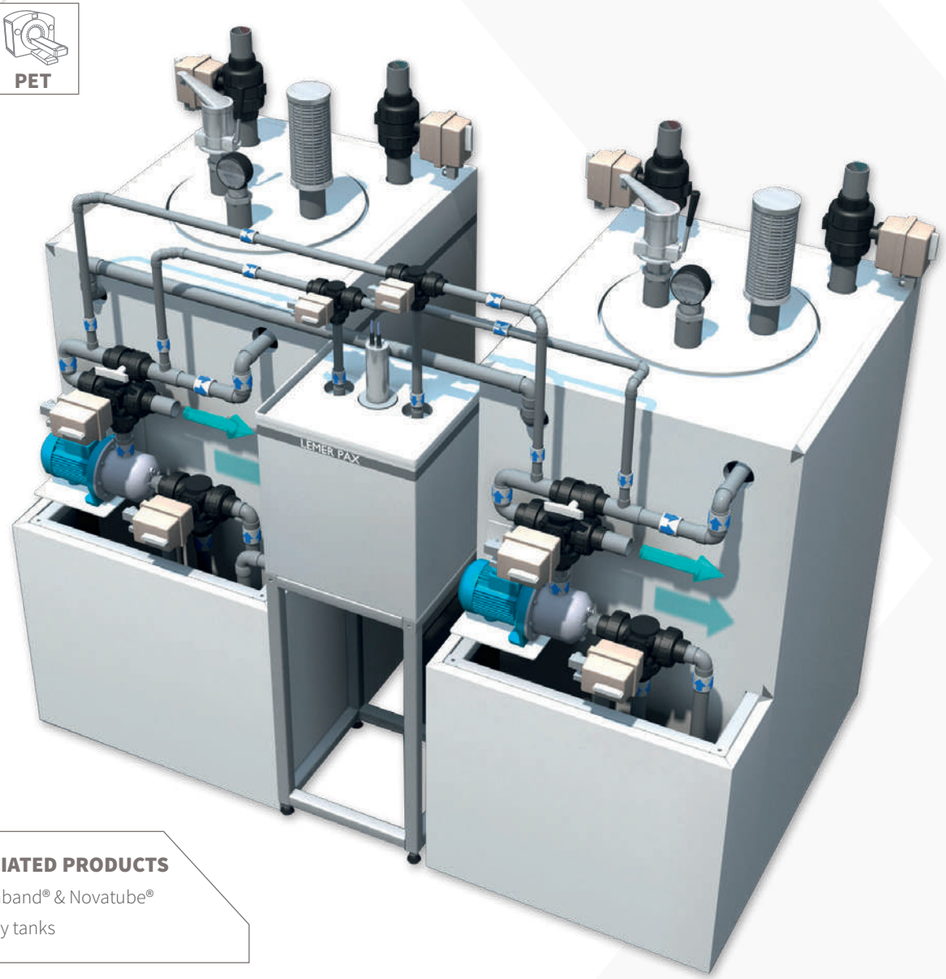

ASSOCIATED PRODUCTS

- Novaband® & Novatube®
- Decay tanks

Easyradwater is an **innovative patented measurement system** designed and developed by Lemer Pax for **monitoring the activity concentration of radioactive effluents** contained in storage or decay tanks. It is suitable for many sectors of activity including the medical sector with nuclear medicine as well as research and industry. The operating principle allows the effluent to be directed in a closed circuit to a measuring tank with an auto-pump. They are then measured and analysed in real time by a **highly sensitive sensor** combined with dedicated Easyradwater control software. The results are stored on the Posibox PC to **ensure traceability**.

The activity concentration measurement is then displayed on a colour touch screen. With a **measurement accuracy of more than 95 %** in 100 min, for a **measured activity from 70 Bq/L to 2 TBq/L** the **Easyradwater** system **is safe and effective**. It ensures **operator safety** with two programmable alarms and 200 mm shielding providing **full radiation protection** and **accurate measurement** while eliminating the need for manual operations to collect samples.

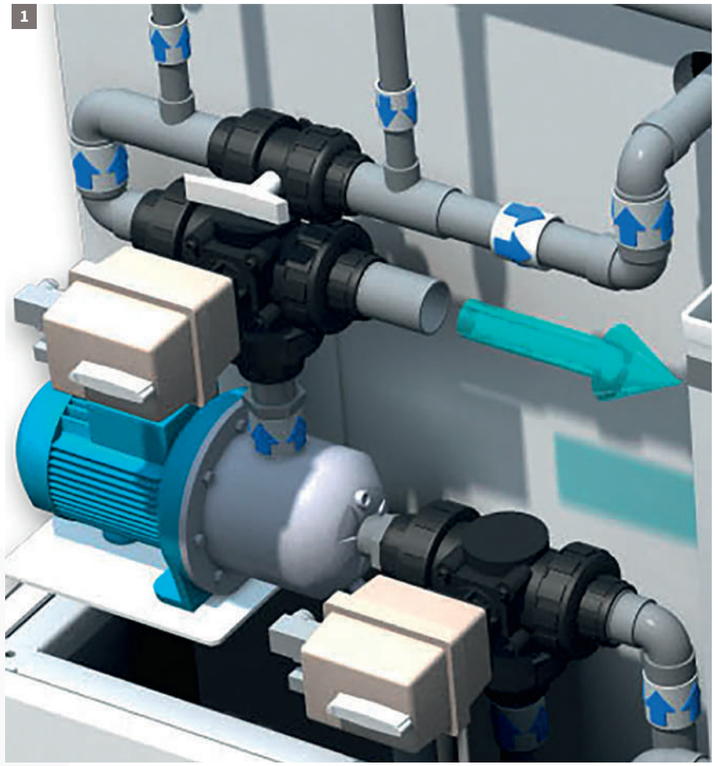

Download
the product data sheet
at lemerpax.com

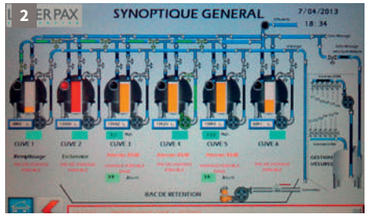

1 | Auto-pump **2** | PLC screen **3** | Measurement screen
4 | Automatic management cabinet **5** | Posibox

CHARACTERISTICS

Detection - Measurement cell	
Ionisation chamber: made of aluminium connected to Posibox	
Cell: 20 L made of PVC	
Radiation protection: 200 mm lead shielding	
Power supply: 100 V/240 V, 50/60 Hz, 320 mA	
Detection level of the measurement / isotope:	^{99m}Tc from 100 Bq/L
	^{131}I from 70 Bq/L
	^{18}F from 50 Bq/L
Easyradwater control software	
Languages: French, English, Russian	
Units: Bq/L or Ci/L	
Secure authorisation levels: 2 levels (users and administrators)	
Choice of isotope to measure: among a database of 300 isotopes	
Measurement acquisition time: 10 to 3,600 seconds	
Features: - Automatic calculation of the radioactive decay according to the selected isotope and display of the theoretical date of effluent release (configurable according to local standards in force) - Monitoring of the internal quality control of the device (high voltage, power supply, response level of the chamber, temperature of the electronics, etc.) - Measurement of the ambient noise with automatic zero setting.	
Optional:	
Cell capacity: Customised	

FOCUS

The Easyradwater system is composed of an aluminium ionisation chamber, a pre-amplifier, a shielded measurement cell and a pumping unit. The system is connected to a touch screen for measurement reporting and to a Posibox control PC equipped with Easyradwater software available in French, English and Russian. Easyradwater is an easy-to-use plug and play measurement system, for quick set-up. At any time, the operator can monitor the activity concentration in real time on the touchscreen. The system is accurate and versatile, and allows to select the reference radioisotope from a database of over 300 isotopes.

NOVABAND® & NOVATUBE®

RADIATION PROTECTION FLEXIBLE TAPE AND TUBES MADE FROM NOVASHIELD®

ALL **ENERGIES**

ASSOCIATED PRODUCTS

- Novashield® sheets

FOCUS

Novaband® flexible bands and Novatube® tubes make it very easy to produce **customised biological protection adapted to the needs** of users exposed to ionising radiation in services and hospitals holding radioactive sources, within a controlled timeframe. **The innovative technology of the Novashield® lead-free biological protection** material designed by Lemer Pax allows to produce radiation protection parts in all shapes and sizes, based on standards or customised requests in terms of geometry and weight, whether you need just one part or a large run. Novatube® and Novaband® are **easy to handle**, and equipped with retaining straps to ensure easy and safe installation, due to the great flexibility of the Novashield® material, which is easy to cut. The smooth surface of Novashield® allows easy decontamination while providing consistent radiation protection for exposed personnel.

Due to their shape and flexibility of handling, Novaband® and Novatube® products allow for many protective configurations and are particularly suitable for covering certain **components of shielded hot cells** or **piping**, mainly connected to **decay systems and tanks for the management of radioactive effluents** in services. With their **interlocking design, radiation protection is uniform and optimal** across the entire surface of the tape and tubes and around the circumference of the tube.

CHARACTERISTICS

NOVABAND				NOVASHIELD® "365"				NOVASHIELD® "380"				NOVASHIELD® "800"			
Code Replace _ _ _ by Novashield® grade	Thickness	Width	Length	Weight per part	Weight per metre	Attenuation (^{60}Co)	Lead equivalence (^{60}Co)	Weight per part	Weight per metre	Attenuation (^{60}Co)	Lead equivalence (^{60}Co)	Weight per part	Weight per metre	Attenuation (^{60}Co)	Lead equivalence (^{60}Co)
NovaBand _ _ _-50/3	3 mm	50 mm	2,4 m	1,3 kg	0,5 kg	4%	0,7 mm	1,3 kg	0,5 kg	4,5%	0,8 mm	2,8 kg	1,1 kg	12,5%	2,2 mm
NovaBand _ _ _-50/6	6 mm	50 mm	2,4 m	2,5 kg	1,1 kg	8%	1,4 mm	2,6 kg	1,1 kg	10%	1,7 mm	5,5 kg	2,3 kg	20%	3,8 mm
NovaBand _ _ _-75/3	3 mm	75 mm	2,4 m	1,9 kg	0,8 kg	4%	0,7 mm	2,0 kg	0,8 kg	4,5%	0,8 mm	4,1 kg	1,7 kg	12,5%	2,2 mm
NovaBand _ _ _-75/6	6 mm	75 mm	2,4 m	3,8 kg	1,6 kg	8%	1,4 mm	3,9 kg	1,6 kg	10%	1,7 mm	8,3 kg	3,5 kg	20%	3,8 mm
NovaBand _ _ _-100/3	3 mm	100 mm	2,4 m	2,5 kg	1,1 kg	4%	0,7 mm	2,6 kg	1,1 kg	4,5%	0,8 mm	5,5 kg	2,3 kg	12,5%	2,2 mm
NovaBand _ _ _-100/6	6 mm	100 mm	2,4 m	5,1 kg	2,1 kg	8%	1,4 mm	5,3 kg	2,2 kg	10%	1,7 mm	11,1 kg	4,6 kg	20%	3,8 mm

NOVATUBE 65/165

NOVATUBE 118/178

Download
the product data sheet
at lemerpax.com

CHARACTERISTICS

NOVATUBE					NOVASHIELD® "365"				NOVASHIELD® "380"				NOVASHIELD® "800"			
Code Replace _ _ _ by Novashield® grade	Wall thickness	Inside diameter	Outside diameter	Length	Weight per part	Weight per metre	Attenuation (^{60}Co)	Lead equivalence (^{60}Co)	Weight per part	Weight per metre	Attenuation (^{60}Co)	Lead equivalence (^{60}Co)	Weight per part	Weight per metre	Attenuation (^{60}Co)	Lead equivalence (^{60}Co)
NovaTube _ _ _-22/52	15 mm	22 mm	52 mm	300 mm	1,8 kg	6,1 kg	17%	3,5 mm	1,9 kg	6,4 kg	21%	4,0 mm	4,0 kg	13,4 kg	42%	9,0 mm
NovaTube _ _ _-27/57	15 mm	27 mm	57 mm	300 mm	2,1 kg	6,9 kg	17%	3,5 mm	2,2 kg	7,2 kg	21%	4,0 mm	4,6 kg	15,2 kg	42%	9,0 mm
NovaTube _ _ _-33/63	15 mm	33 mm	63 mm	300 mm	2,4 kg	7,9 kg	17%	3,5 mm	2,5 kg	8,3 kg	21%	4,0 mm	5,2 kg	17,4 kg	42%	9,0 mm
NovaTube _ _ _-48/78	15 mm	48 mm	78 mm	300 mm	3,1 kg	10,4 kg	17%	3,5 mm	3,3 kg	10,8 kg	21%	4,0 mm	6,8 kg	22,8 kg	42%	9,0 mm
NovaTube _ _ _-50/80	15 mm	50 mm	80 mm	300 mm	3,2 kg	10,7 kg	17%	3,5 mm	3,4 kg	11,2 kg	21%	4,0 mm	7,1 kg	23,5 kg	42%	9,0 mm
NovaTube _ _ _-52/82	15 mm	52 mm	82 mm	300 mm	3,3 kg	11,1 kg	17%	3,5 mm	3,5 kg	11,5 kg	21%	4,0 mm	7,3 kg	24,3 kg	42%	9,0 mm
NovaTube _ _ _-65/95	15 mm	65 mm	95 mm	300 mm	4,0 kg	13,2 kg	17%	3,5 mm	4,1 kg	13,8 kg	21%	4,0 mm	8,7 kg	29,0 kg	42%	9,0 mm
NovaTube _ _ _-112/142	15 mm	112 mm	142 mm	300 mm	6,3 kg	21,0 kg	17%	3,5 mm	6,6 kg	21,8 kg	21%	4,0 mm	13,8 kg	46,0 kg	42%	9,0 mm
NovaTube _ _ _-118/148	15 mm	118 mm	148 mm	300 mm	6,6 kg	22,0 kg	17%	3,5 mm	6,9 kg	22,9 kg	21%	4,0 mm	14,4 kg	48,1 kg	42%	9,0 mm
NovaTube _ _ _-22/83	30 mm	22 mm	82 mm	300 mm	5,2 kg	17,2 kg	31%	6,0 mm	5,4 kg	17,9 kg	37%	7,5 mm	11,3 kg	37,7 kg	65%	17,5 mm
NovaTube _ _ _-27/87	30 mm	27 mm	87 mm	300 mm	5,6 kg	18,8 kg	31%	6,0 mm	5,9 kg	19,6 kg	37%	7,5 mm	12,4 kg	41,3 kg	65%	17,5 mm
NovaTube _ _ _-33/93	30 mm	33 mm	93 mm	300 mm	6,2 kg	20,8 kg	31%	6,0 mm	6,5 kg	21,7 kg	37%	7,5 mm	13,7 kg	45,6 kg	65%	17,5 mm
NovaTube _ _ _-48/108	30 mm	48 mm	108 mm	300 mm	7,7 kg	25,8 kg	31%	6,0 mm	8,1 kg	26,8 kg	37%	7,5 mm	16,9 kg	56,5 kg	65%	17,5 mm
NovaTube _ _ _-52/112	30 mm	52 mm	112 mm	300 mm	8,1 kg	27,1 kg	31%	6,0 mm	8,5 kg	28,2 kg	37%	7,5 mm	17,8 kg	59,4 kg	65%	17,5 mm
NovaTube _ _ _-65/125	30 mm	65 mm	125 mm	300 mm	9,4 kg	31,4 kg	31%	6,0 mm	9,8 kg	32,7 kg	37%	7,5 mm	20,6 kg	68,8 kg	65%	17,5 mm
NovaTube _ _ _-112/172	30 mm	112 mm	172 mm	300 mm	14,1 kg	46,9 kg	31%	6,0 mm	14,7 kg	48,8 kg	37%	7,5 mm	30,8 kg	102,8 kg	65%	17,5 mm
NovaTube _ _ _-118/178	30 mm	118 mm	178 mm	30 mm	14,7 kg	48,9 kg	31%	6,0 mm	15,3 kg	50,9 kg	37%	7,5 mm	32,1 kg	107,2 kg	65%	17,5 mm
90° elbow NovaTube _ _ _-118/178[1]	30 mm	118 mm	178 mm	300 mm	28,3 kg	-	31%	6,0 mm	29,5 kg	-	37%	7,5 mm	62,1 kg	-	65%	17,5 mm
Tee NovaTube _ _ _-118/178[2]	30 mm	118 mm	178 mm	300 mm	18,2 kg	-	31%	6,0 mm	18,9 kg	-	37%	7,5 mm	39,8 kg	-	65%	17,5 mm
NovaTube _ _ _-65/165	50 mm	65 mm	165 mm	300 mm	19,0 kg	63,3 kg	45%	10,0 mm	19,8 kg	65,9 kg	58%	15,0 mm	41,6 kg	138,8 kg	82%	29,0 mm
90° elbow NovaTube _ _ _-65/165[3]	50 mm	65 mm	165 mm	300 mm	19,2 kg	-	45%	10,0 mm	20,0 kg	-	58%	15,0 mm	42,1 kg	-	82%	29,0 mm
Tee NovaTube _ _ _-65/165[2]	50 mm	65 mm	165 mm	300 mm	24,0 kg	-	45%	10,0 mm	25,0 kg	-	58%	15,0 mm	52,6 kg	-	82%	29,0 mm

Other formats available on request. Attenuation and lead equivalence values are based on tests carried out by an independent organisation (TRAD Tests & Radiations)
[1] 90° elbow - 300 x 300 mm (2D and 3D elbow) [2] Male/male/female tee 150 x 300 mm [3] 90° elbow - 150 x 150 mm (2D and 3D elbow)

CONTAMINATION MANAGEMENT

NOVASHIELD® SHEETS 180
DISINFECTANTS & DECONTAMINANTS 181

NOVASHIELD® SHEETS

FLEXIBLE LEAD-FREE RADIATION PROTECTION SHEETS

ALL **ENERGIES**

SPECT **PET**

ASSOCIATED PRODUCTS

- Novaband® & Novatube®

Download the product data sheet at lemerpax.com

Novashield® is an **innovative** lead-free, **non-toxic and environmentally friendly** composite **material** developed by Lemer Pax for **gamma radiation protection** devices. **Highly flexible** and easy to work with, Novashield® can be adapted to many applications and needs with **three specific** sheet **references** available: **RX31, RX41 and RX45**. Novashield® RX45 sheets are used to make **easily removable radiological shielding forms** around complex parts, piping, flexible radiation protection panels such as strip curtains, cover flaps, curtains and blankets. Novashield® RX31 and RX41 sheets are used to make personal protective equipment: radiation protection clothing, coveralls and strip curtains on glove box ports and shielded hot cells. Novashield® is a woven fabric, resistant to cracking, tearing and puncturing, and is extremely strong and durable.

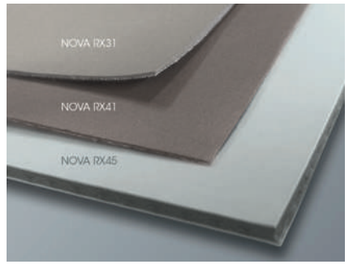

CHARACTERISTICS

General	NOVASHIELD® RX31		NOVASHIELD® RX41		NOVASHIELD® RX45	
Weight:	1,5 kg/m²		1,78 kg/m²		7,75 kg/m²	
Density:	2,1 g/cm³		3,1 g/cm³		3,4 g/cm³	
Thickness:	0,64 mm		0,66 mm		2,4 mm	
Max. roll width:	0,7 m		0,7 m		0,9 m	
Max. roll length:	25 m		25 m		8 m	
Roll weight:	25 kg		33 kg		58 kg	
Colour and texture:	Front: Smooth rubber	Back: Textile mesh	Front: Smooth PVC	Back: Textile mesh	Front: Smooth rubber	Back: Smooth rubber

Technical specifications

Source	Reference energy	Lead equivalence (mm)	Half-value layer (mm)	Attenuation %	Lead equivalence (mm)	Half-value layer (mm)	Attenuation %	Lead equivalence (mm)	Half-value layer (mm)	Attenuation %
X-ray	150 KeV	0,15	0,77	43,15	0,13	0,86	39,97	0,49	0,85	84,68
^{57}Co	122 KeV	0,07	1,83	21,26	0,15	0,69	46,84	0,63	0,69	90,11
^{99m}Tc	141 Kev	0,08	2,71	14,86	0,16	1,03	34,58	0,76	1,02	78,93
^{192}Ir	317 KeV	0,09	15,38	2,80	0,16	7,17	5,91	0,62	6,94	20,52
^{131}I	365 KeV	0,09	18,37	2,35	0,16	9,06	4,71	0,65	8,71	16,72
^{18}F	511 KeV	0,10	27,49	1,58	0,16	16,06	2,68	0,66	15,12	10,00
^{137}Cs	662 KeV	0,11	33,64	1,29	0,17	21,47	2,01	0,68	19,97	7,67
^{60}Co	1 250 KeV	0,15	45,16	0,96	0,18	39,72	1,09	0,71	36,14	4,32

All values in the table are valid for one Novashield® sheet.

DISINFECTANTS & DECONTAMINANTS

RANGE OF MULTI-PURPOSE PRODUCTS FOR THE DISINFECTION AND DECONTAMINATION OF EQUIPMENT, ACCESSORIES, SURFACES, HANDS AND SKIN

ALL **ENERGIES**

SPECT **PET**

The Franklab product range, distributed by Lemer Pax offers **detergent, disinfection and radioactivity decontamination solutions** adapted to users, **accessories and small equipment** such as syringe shields, handling tongs as well as **surfaces** including furniture, hot cells, benches, floors, etc.

Available in different formats: foam, spray, concentrated liquids to be diluted for immersion tanks; the **wide spectrum of applications** in SPECT and PET nuclear medicine features adapted and efficient radioactive decontamination and hygiene solutions with a complete and versatile product range.

DDN9

ALL **ENERGIES**

SPECT **PET**

Download
the product data sheet
at lemerpax.com

Triple action, **DDN 9** is a **neutral detergent-disinfectant** and **radioactivity decontaminant** to be used for **soaking** with a 10 % dilution. It is **compatible with a wide range of materials** such as syringe shields and tourniquets used in the administration of radiopharmaceuticals of all energies. Its decontaminating action is achieved by trapping the radioisotopes through a combination of sequestering agents. DDN 9 is packaged and available in 1 L or 5 L bottles according to the needs and applications of the service.

CHARACTERISTICS

General		
Appearance: Liquid		
Colour: Opalescent		
pH at 10 %: 7,2		
Shelf life: 2 years		
Composition: Non-ionic surfactants Sequestering agents Quaternary ammonium		
Packaging:	1 L bottle	5 L bottle
Ref.:	**00043069**	**02090001**

Disinfectant properties

ACTIVITY	STANDARDS	CONCENTRATION	CONTACT TIME
Bactericidal	EN 13727 EN 14561 EN 13697 EN 1276	0,5 % 0,5 % 0,5 % 0,25 %	5 min 15 min 5 min 5 min
Yeasticidal	EN 13624 EN 14562 EN 1650 EN 13697	0,5 % 0,5 % 0,25 % 0,5 %	5 min 15 min 5 min 5 min
Virucidal	EN 14476 PRV (hepatitis B model) DBV (hepatitis C model) HIV	0,5 % 0,5 % 0,5 %	5 min 15 min 15 min

DDN SURF

ALL **ENERGIES**

SPECT **PET**

Download
the product data sheet
at lemerpax.com

DDN Surf is a **concentrated neutral detergent-disinfectant to be diluted** before use for the **decontamination of floors and surfaces in nuclear medicine**. With a broad microbial spectrum, it is guaranteed to be **free of CMR** (Carcinogenic, Mutagenic, and Reprotoxic chemicals) for users. This product is available in 1 L and 5 L bottles.

CHARACTERISTICS

General		
Appearance: Liquid		
Colour: Green		
pH at 0.25 %: 6,4		
pH at 2 %: 7		
pH at 10 %: 7		
Shelf life: 2 years		
Composition: Non-ionic surfactants / Sequestering agents / Quaternary ammonium / Peppermint essential oil		
Packaging:	1 L bottle	5 L bottle
Ref.:	**00043073**	**00043074**

Disinfectant properties

ACTIVITY	STANDARDS	CONCENTRATION	CONTACT TIME
Bactericidal	EN 13727 + A1 EN 1276 / EN 13697	0,25 % 1 %	5 min 5 min
Yeasticidal	EN 13624 EN 1650 EN 13697	0,25 % 0,5 % 1 %	5 min 5 min 5 min
Fungicidal	EN 13697 EN 1650	2 % 2 %	10 min 15 min
Virucidal	EN 14476 PRV (Model Hepatitis B Virus) EN 14476 + A1 HIV	0,25 % 0,25 %	1 min 15 min
Sporicidal	EN 13704 C.*difficile*	1 %	15 min

DDN SPRAY

ALL **ENERGIES**

SPECT **PET**

Download
the product data sheet
at lemerpax.com

DDN Spray is a neutral detergent-disinfectant for the **cleaning of surfaces and furniture** and is a **ready-to-use product** suitable for use in hospitals and particularly in nuclear medicine for its **decontaminating action**. DDN Spray is **quick and easy to use**, either by **spraying directly** onto the surface to be treated or using a wipe, and has a **broad microbial spectrum**.

CHARACTERISTICS

General
Appearance: Liquid
Colour: Colourless
pH in use: 7,5
Shelf life: 2 years
Composition: Cationic surfactants Non-ionic surfactants Sequestering agents
Packaging: 750 mL spray
Ref.: 2090001

Disinfectant properties

ACTIVITY	STANDARDS	CONCENTRATION	CONTACT TIME
Bactericidal	EN 13727 EN 13697	100 %	1 min
	EN 1276	100 %	5 min
Yeasticidal	EN 1650 EN 13697	100 % 100 %	1 min 5 min
Fungicidal	EN 1650 EN 13624 EN 13697	100 % 100 % 100 %	5min 10 min 15 min
Virucidal	EN 14476 Rotavirus	100 %	1 min

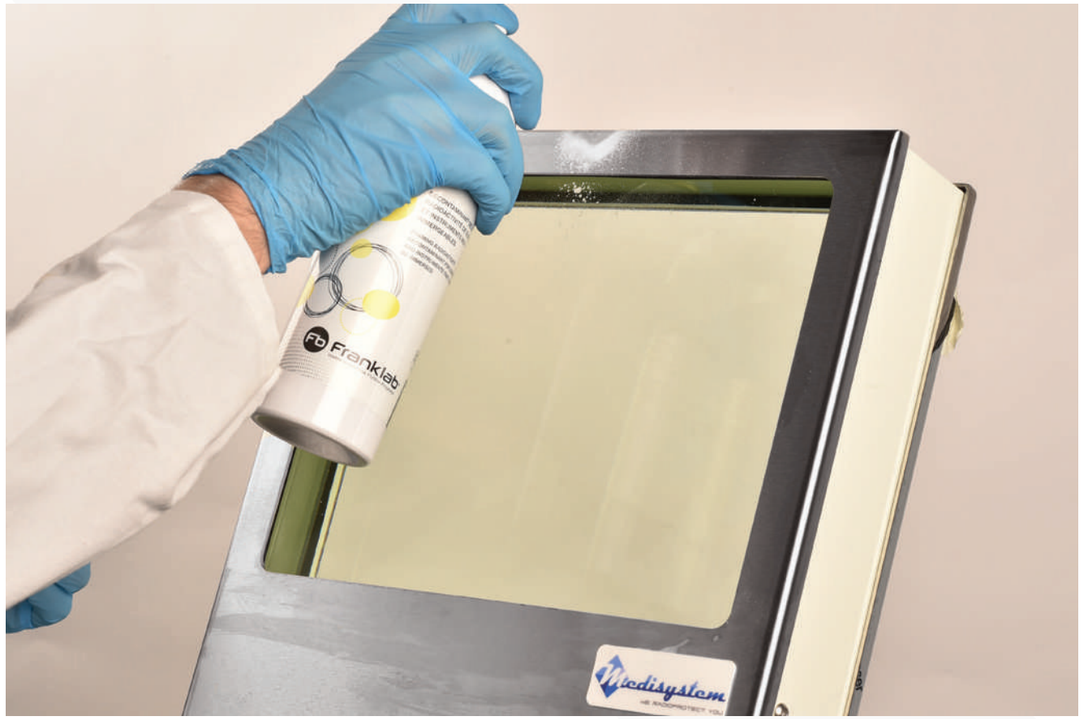

TFD FOAM

ALL **ENERGIES**

SPECT **PET**

Download
the product data sheet
at lemerpax.com

TFD Foam spray is a **radioactivity decontaminant** used in the management of **surface contamination** in nuclear medicine. TFD Foam is ideal for the decontamination of non-suLMErsible materials as well as for vertical surfaces such as the walls of shielded hot cells and can also be used to delimit contaminated areas. It is **ready to use**: simply shake the aerosol before spraying on the area to be decontaminated; leave for 5 minutes, then wipe the surface with a damp, single-use wipe from the outside of the contaminated area to the point of contamination.

CHARACTERISTICS

General
Appearance: Foam
Colour: White
pure pH: 6,5
Shelf life: 4 years
Conservation after opening: 4 years
Composition: Non-ionic and anionic surfactants Sequestering agents Propellant: Butane/propane mixture
Packaging: 500 mL bottle
Ref.: 02090002

TFD NEUTRAL

ALL **ENERGIES**

SPECT **PET**

Download
the product data sheet
at lemerpax.com

TFD Neutral is a **foaming detergent-degreaser** allowing for **decontamination through immersion (15 minutes)** after dilution to 10 %, of **accessories and small immersible materials** used in nuclear medicine, by trapping the radioisotopes with a combination of sequestering agents. Easily rinsed with water, this product allows the removal of all types of organic and mineral impurities. TFD Neutral is also suitable for surface decontamination with a single-use wipe impregnated with a 10 % TFD Neutral solution.

CHARACTERISTICS

General
Appearance: Liquid
Colour: Colourless
pure pH: 6,5
pH at 10 %: 6,5
Shelf life: 2 years
Composition: Non-ionic and anionic surfactants Sequestering agents
Packaging: 5 L bottle
Ref.: 02090001

TFD SKIN

ALL **ENERGIES**

SPECT **PET**

Download
the product data sheet
at lemerpax.com

TFD Skin is a decontaminant for users' hands and skin, and is the reference product for hand washing in all nuclear medicine services. With a neutral pH formula and containing **glycerine** for a **smooth, hydrated skin**, daily use of TFD Skin is recommended for both its **preventive** and **protective aspects** for the personnel of the services, with a **97 % elimination of the initial radioactivity**.

CHARACTERISTICS

General
Appearance: Cream
Colour: White
pure pH: 7
Shelf life: 2 years
Composition: Non-ionic surfactants Sequestering agents Glycerine
Packaging: 460 g bottle
Ref.: 00043072

SINCE 1953, THE LEMER COMPANY HAS BEEN STUDYING AND MANUFACTURING PROTECTIVE EQUIPMENT FOR THE HANDLING OF RADIOISOTOPES.

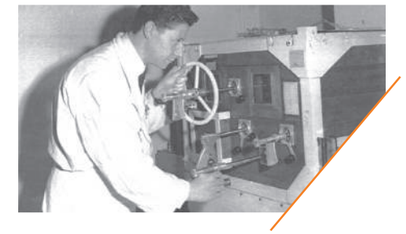

1959 - M. Robert JAMES handling ^{131}I dose in a Lemer shielded hot cell (the first user of a French hot cell) in the radioisotope service of Professor Tubiana at the Gustave Roussy Institute, Paris, France.

Lemer Pax worked alongside the CEA in the development of protections used for “Zoé”, the first French atomic battery. Z for zero Energy; O for uranium oxide; and E for heavy water (eau lourde in French).
A few years later, it was with CEA engineers that the first shielded hotcells were developed to remotely manipulate the production of radioisotopes used in industry.

TODAY, LEMER PAX OFFERS ITS INNOVATIVE RADIATION PROTECTION SOLUTIONS ALL OVER THE WORLD THROUGH ITS **3 REGIONAL OFFICES**

LEMER PAX AMERICA
MONTREAL - CANADA
485, McGill, Suite 710
Montreal (Quebec)
H2Y 2H4 Canada
Tel :+ 1 (0) 514 779-8215
Email : consulting@gammathera.com

LEMER PAX – HEADQUARTERS
NANTES - FRANCE
72 rue de Lorraine
ZA Erdre Active – Malabry
44 240 La Chapelle sur Erdre
Tel : + 33 (0) 2 40 25 24 04
Email : contact@lemerpax.com

LEMER PAX IN ASIA
TOKYO – JAPAN
CIC Banks
Sun Mall Crest 301
1-19-10 Shinjuku, Shinjuku-ku
160-0022 Tokyo
Tel : +81 (0) 80 3542 9176
Email : f.laurent@flconsulting.jp

First issue: Altavia Nantes / Printing: Eproc Factory / Photo credits: Jules Lemer / JD Billaud - Nautilus
In the interests of continuous improvement, Lemer Pax reserves the right to make any modifications it deems necessary / Document not contractually-binding /
Printed on 100% recycled paper
June 2022

LEMER PAX SAS - 72, rue de Lorraine - ZA Erdre Active-Malabry - BP 54201 - 44242 La Chapelle sur Erdre Cedex
Tel: +33 (0)2 40 25 24 04 / Fax: +33 (0)2 40 25 18 37 / Email: contact@lemerpax.com
SAS with a capital of 350 000€ - 870 801 594 RCS Nantes - APE 3250 A - VAT: FR 18 870 801 594

CONTACT
OUR EXPERT TEAMS

**ALWAYS AVAILABLE
TO ANSWER YOUR QUESTIONS,
FIND SOLUTIONS MEETING YOUR NEEDS
AND PROVIDE TECHNICAL ADVICE...**

TEL: **+33(0) 2 40 25 24 04**
FAX: **+33(0) 2 40 25 18 37**
EMAIL: **CONTACT@LEMERPAX.COM**

LEMERPAX.COM

PERFORMANCE LNE CERTIFICATION ISO 9001

GMED GROUPE LNE · PATENTED PRODUCT · ORIGINE FRANCE GARANTIE · GMP · Grand Prix Siemens de l'innovation COUP DE CŒUR DU JURY / JURY'S PRIZE 2011 · Entreprise membre de bpifrance EXCELLENCE 2011 · TROPHÉES DE L'INNOVATION inpi 2012 · NUCLEAR MEDICINE EUROPE · bee PAX LEMERPAX

Medisystem LE RADIOPROTECT VOL. · LEMER PAX PROTECTING LIFE